Rules and Instructions Governing Overweight and Overdimension Vehicle Permits

Annotated Copy

VERMONT

Agency of Transportation
Department of Motor Vehicles
120 State Street
Montpelier, Vermont 05603

Contents

Blanket Permits 3
Definition – Blanket Permit: 3
Definition – Nondivisible Loads: 3
Emergency Moves 11
Definition: 11
Farm Equipment Dealer Permits 13
Definition: 14
Reasonable Access Permits 16
Reasonable Access Under Federal Law: 16
Reasonable Access Permits: 17
Exceptions: 17
Single Trip Permits 21
Definition – Single Trip Permit: 22
Definition – Nondivisible Loads: 22
Special Oversize Trailers: 22
~~Single Trip Permits 90,000 Lb. Divisible Load – Interstate Only~~ 31
~~Definition – Single Trip 90,000 Lb Divisible Load Interstate Permit:~~ 32
~~Private Permit Services:~~ 33
Special Excess Weight Permits 35
Special Purpose Blanket Permits 39
Special Purpose Motor Vehicle In Excess Of The Statutory Limits ~ Self-Issue Crane Permits 45
Permit Dimensions: 45
Superloads/Engineering Inspections 51
Engineering Inspection Requirements For State/Interstate Highways: 51
Over Length Permit For Operation On Route 4 59

Annotated Copy

Blanket Permits

- **INTRODUCTION:**

23 VSA §1400 and §1402 empower the Commissioner of Motor Vehicles to issue overweight or over dimension permits for the operation or movement of a vehicle over state highways and certain town highways in excess of the legal limit. The Commissioner may make regulations subject to which the vehicle must be operated. The approval may be given for a limited or unlimited length of time and may be withdrawn for cause. In addition, the Commissioner of Motor Vehicles may deny permits for just cause including, but not limited to, providing false information on applications, continued violation of the rules governing overweight/over dimension operation and/or repeated violation of similar offenses.

The policy of the Department is to give consideration to the safety and convenience of the general public and the protection of the highway systems of this state. The legislature, in setting forth certain statutory limitations, intended to protect the public from hazard and unnecessary inconvenience and to preserve the highways.

- **DEFINITION – BLANKET PERMIT:**

A Blanket Permit is the written authorization granted by the Commissioner of Motor Vehicles for the movement of a vehicle or combination vehicle and its nondivisible load with prescribed limits of size and/or weight over State/Interstate highways.

- **Note:** Vehicles obtaining blanket permits for weight must be registered to the maximum limit and so configured as to legally meet the road limit in accordance with 23 VSA §1391 & §1392.

- **DEFINITION – NONDIVISIBLE LOADS:**

Blanket Permits are issued for nondivisible loads. For this purpose *nondivisible* means any load or vehicle exceeding applicable dimension or weight limits which, if separated into smaller loads or vehicles, would:

1. Compromise the intended use of the vehicle, i.e., make it unable to perform the function for which it was intended;

2. Destroy the value of the load or vehicle, i.e., make it unusable for its intended purpose; or

3. Require more than eight (8) work hours to dismantle using appropriate equipment. The applicant for a nondivisible load permit has the burden of proof as to the number of work hours required to dismantle the load.

- **Note:** Nondivisible does not prohibit the movement of more than one piece when the permit is issued for the largest piece and additional pieces do not cause the total load to exceed a dimension already allowed by the permitting of the original piece. For instance, a permit issued for an ~~overwidth~~ over width wooden truss would remain valid if a number of trusses

Annotated Copy

were piled on but that action did not cause the load to exceed the width of the original truss or cause the load to be overlength, ~~overheight~~ over height, or overweight.

- **WHERE TO APPLY:**

Applications are primarily accepted through the mail or in person and may be obtained from:

Commercial Vehicle Operations
Department of Motor Vehicles
120 State Street
Montpelier, VT 05603-0001

Phone: 802-828-2064
Fax: 802-828-5418
DMV.CommercialVehicleOSOWPermitting@vermont.gov
dmv.vermont.gov

~~Commercial Vehicle Operations Unit~~
~~Department of Motor Vehicles~~
~~120 State Street~~
~~Montpelier, VT 05603-0001~~

~~Phone: 802-828-2064~~
~~Fax: 802-828-5418~~
~~DMV Website: dmv.vermont.gov~~

- ~~**FEES:**~~

~~$100.00 for the first unit, $5.00 for each additional unit up to a maximum of $1,000.00.~~

- **EXPIRATION:**

Blanket Permits expire with the vehicles registration.

- **PERMITS ISSUED TO REGISTRANT:**

Permits must be issued in the name of the registrant and match the registration certificate.

- **TRANSFER OF PERMITS:**

Permits may only be transferred in conjunction with the truck registration for an administrative fee.

- **HOURS OF OPERATION:**

Travel with vehicles and/or loads which are ~~overwidth~~ over width or overlength or ~~overheight~~ over height shall be restricted to daylight hours and movement shall be made between thirty (30) minutes before sunrise to thirty (30) minutes after sunset. Vehicles, which are overweight only and are capable of traveling with the traffic flow, are not restricted to daylight travel time.

On highways where traffic is heavy during certain hours, it may be necessary to further restrict the movement to certain hours of the day or to certain days of the week.

- **SATURDAY, SUNDAY AND HOLIDAY OPERATIONS:**

~~Loads over ten feet, six inches (10' 6") wide or over one hundred feet (100') long or in excess of one hundred eight thousand (108,000) pounds must abide by the holiday restrictions.~~ On state highways unless otherwise stated, permits will **not** be issued for movement of loads in excess of

Annotated Copy

one hundred eight thousand (108,000) pounds, or over ~~ten feet, six inches (10' 6")~~ twelve feet (12'0") wide or over one hundred feet (100') long on any Saturday, Sunday, ~~any Friday afternoon between July 1 and Labor Day,~~ or on the following legal holidays as observed in the State of Vermont:

- New Year's Day: January 1st
- ~~Martin Luther King Day: 3rd Monday in January~~
- ~~President's Day: 3rd Monday in February~~
- Memorial Day: Last Monday in May
- Independence Day: July 4th
- Labor Day: 1st Monday in September
- ~~Columbus Day: 2nd Monday in October~~
- ~~Veteran's Day: November 11th~~
- Thanksgiving Day: 4th Thursday in November
- Christmas Day: December 25th

~~If a holiday falls on a Saturday, the preceding Friday is a legal holiday; if a holiday falls on a Sunday, the following Monday is a legal holiday and these days are restricted as other holidays.~~

The Commissioner of Motor Vehicles may ~~further~~ restrict the movement of oversize and overweight vehicles before and after certain holidays if deemed necessary.

- **INCLEMENT WEATHER:**

For loads 12' wide or greater, and/or 80' long or greater:

No travel is allowed during any ice condition, sleet, freezing rain, slush or combination thereof or any snow accumulation to the extent it is heavy enough to stick to the highway surface~~.~~; and ~~Also,~~ no travel is allowed ~~during any period of rain or other weather that requires the use of windshield wipers in the "steady" on position by users of the highway, or~~ when visibility is reduced by rain, fog or any other weather condition ~~of the conditions previously listed~~ to the extent the load is not readily identifiable by users of the highway at a distance of a quarter (¼) mile. At all times roads must be safe and clear enough to allow traffic to pass. ~~Roads must be clear and free of water which causes spray or mist that interferes with the visibility of other vehicles.~~

When such conditions exist during a trip, permitted vehicles must exit the road at the first available safe location where vehicle and load can park without impeding traffic until the weather conditions clear ~~and/or until the road conditions improve~~. A vehicle is not permitted to travel during inclement weather if it is subject to, or was required to have, and engineering review.

- **SPEED:**

The Commissioner may prescribe maximum speeds below legal limits for hazardous loads or conditions. State highways speed is limited to forty-five (45) miles per hour for loads in excess of ninety thousand (90,000) pounds or ten feet (10') in width or thirteen feet, six inches (13' 6") in height or seventy-five feet (75') in length. Interstate highways maximum speed shall be sixty (60) miles per hour unless otherwise specified. Speed may be restricted further on specific roads or portions of roads as required to ensure safe movement of over dimension loads.

- **POSTED ROADS:**

During winter thaws, rainy periods or when frost begins to melt, the Agency of Transportation may post state highways. Permits **DO NOT** ~~supercede~~ supersede road postings.

Annotated Copy

- **MAXIMUM LIMITS:**

Blanket permits for statewide operation must conform to the following guidelines:

1. Maximum Width: Ten feet, six inches (10' 6") when length is greater than ~~sixty-eight feet (68')~~ seventy-five feet (75') up to one hundred feet (100').
2. Maximum Width: Twelve feet, six inches (12' 6") when length does not exceed ~~sixty-eight feet (68')~~ seventy-five feet (75').
3. Maximum Height: Fourteen feet (14').
4. Maximum Weight for Nondivisible Loads Only:
   - One hundred eight thousand (108,000) pounds, depending on the number of axles and axle spacing.
   - Twelve thousand (12,000) pounds allowed on the steering axle, twenty thousand (20,000) pounds on all other axles:
     - Five (5) axle combination vehicle = ninety-two thousand (92,000) pounds,
     - Six (6) or more axle combination vehicle = one hundred eight thousand (108,000) pounds.

   Vehicle must be registered to the maximum allowed for the vehicle's configuration.
5. Maximum length for vehicles without a trailer or semi-trailer (single vehicle): Forty-six feet (46').

Operation at one hundred feet (100') or more in length, the permit applicant shall file with the Commissioner of Motor Vehicles, a special certificate of insurance showing minimum coverage of $250,000 for death or injury to one person, $500,000 for death or injury to two or more persons and $250,000 for property damage, all arising out of any one accident.

Blanket permits will not be issued for over width, over length, or over height truck or truck – trailer combinations for statewide operation where the vehicle, excluding the load, is in excess of the legal limit subject to the Special Oversize Trailers exception set forth below. Blanket permits may be issued for over width or over length statewide operations where the vehicle is the commodity being transported.

- **SPECIAL OVERSIZE TRAILERS – DEFINITION; BLANKET PERMITS AVAILABLE UNDER LIMITED CIRCUMSTANCES:**

Special Oversize Trailers or semi-trailers that are over legal length or width. The length or width in excess of legal dimensions is required to move certain oversize loads.

Single Trip Permits are required and are the only permits available for special oversize trailers with two (2) exceptions for which Blanket Permits may be issued.

1. Trailers actually registered on September 1, 1994 and subsequently renewed only by that registrant.

Annotated Copy

If ownership of the trailer is transferred, it no longer falls under the so-called "grandfather" clause. Single Trip Permits would be issued for the delivery of oversize loads that require an oversize trailer and for the dispatch and return of the trailer. Single Trip Permits would also be issued for the movement of empty trailers for repairs or for some similar purposes.

2. The second exception is for trailers or semi-trailers designed and used to transport highway building equipment and road making appliances.

- **SPECIAL LOW BED TRAILER:**

Annual permits may be issued for "low bed" trailers at the fee established by 23 VSA §1402(e). Low bed trailers are manufactured for the primary purpose of carrying heavy equipment on a flat-surfaced deck, which deck is at a height equal to or lower than the top of the rear axle group provided the total vehicle length does not exceed seventy-five feet (75'), a loaded width of twelve feet, six inches (12' 6") and total weight of one hundred eight thousand (108,000) pounds and has a height not exceeding fourteen feet (14'). Signs and flags are required if the vehicle exceeds seventy-five feet (75') in length or eight feet, six inches (8' 6") in width.

- **PERMISSION FROM CITIES/TOWNS:**

  - **OVERWEIGHT:**

    For operation of a vehicle in excess of the statutory weight limits over highways and bridges under the jurisdiction of a municipality, except Class 1 town highways, application will be made to the appropriate legislative body or its representative. A list of any special weight limits which differ from statutory limits is available from the Department of Motor Vehicles along with the name of the person responsible for issuing permits in each municipality.

  - **OVERDIMENSION:**

    For operation, on highways under the jurisdiction of a municipality, of a vehicle and load in excess of the statutory dimensions, but within the dimensions allowed under a "Blanket Permit", permits may be issued by the Department of Motor Vehicles, Commercial Vehicle Operations Unit. For operation of a vehicle and load in excess of the dimensions allowed under a blanket permit, permits are issued by the municipality. Application is made to the appropriate legislative body or their representative.

- **MAXIMUM WEIGHT:**

No vehicle or combination of vehicles shall be operated upon the highways of this state when the gross weight on the road surface through any wheel thereof exceeds six hundred (600) pounds per inch of tire width. (Manufacturer's designation shall be used for computing tire width.) Any permit issued shall not be valid upon the state highways, state aid or town roads or bridges that are posted for a lower road limit than the gross weight of the vehicle and load.

- **MAXIMUM HEIGHT:**

The clearance of facilities and general safety of the traveling public are the governing factors in issuing over height permits. The height of structures shall be checked by the permit applicant to

Annotated Copy

insure adequate clearance is available for the movement. The height of traffic lights at fourteen feet (14') is a factor in determining the height allowed.

- **Note:** Older traffic signals may be lower due to stretch and sag.

- **FLAGGERS:**

Flaggers, wearing reflective traffic vests, may be required for over dimension or overweight loads. The purpose of the flagger is to protect traffic when entering or leaving main highways and to assist the driver at locations where visibility is reduced or obscured.

- **FLAGS/LIGHTS:**

Flags are required on all oversize loads. The flag must be bright or fluorescent red or orange and have a minimum size of eighteen inches by eighteen inches (18" x 18"). They shall be displayed on all four corners (or as close as practicable) of all loads or vehicles that exceed the legal dimensions. Flags shall be in such condition as to be easily distinguished from a reasonable distance. All warning flags shall be secured by at least one corner or mounted on a staff.

1. Over Width Loads: At least four (4) flags mounted at the corners of the vehicle if the vehicle is oversize and at the corners of the load if the load is oversize. In cases of irregular shaped loads such additional flags as may be necessary to mark the widest extremities of the load.

2. Over length loads or loads with rear or front end overhang in excess of four feet (4') shall display one flag at the end of the overhang if less than two feet (2') wide and two (2) flags if the overhang is two feet (2') wide or more.

3. Commercial motor vehicles as defined in 49 CFR 390.5; Such vehicles must have lights installed and operable on the projecting loads as required by 49 CFR 393.11 Footnotes 9 & 10.

- **USE OF TRAVEL LANES:**

When two or more lanes are available in one direction, vehicles shall travel in the right lane except in an emergency or to comply with any other restrictions established by the state.

- **SLOW MOVING VEHICLES:**

All slow moving vehicles shall keep as close to the right hand side of the highway as practicable. A person operating a motor vehicle impeding other traffic on a highway shall pull off the highway at the first location where vehicle and load can park without impeding traffic to allow the traffic to pass before proceeding.

- **PARKED OVERSIZE LOADS:**

Any oversize load, when parked at other than its place of origin or destination, shall conspicuously display the name and telephone number of a party that, at all hours can see to its immediate removal or security if needed. These markings shall be easily legible.

- **SIGNS/SIGN REQUIREMENTS:**

Annotated Copy

Oversize load sign required:

- For over eight feet, six inches (8’ 6”) width.
- For over thirteen feet, six inches (13’ 6”) height.
- For over seventy-five feet (75’) in length.

This sign shall be at least seven feet (7’) long by eighteen inches (18”) high with yellow background and black lettering. Letters shall be at least ten inches (10”) high with a one and one-quarter inch (1¼”) brush stroke. The sign shall be made of durable material that will not be affected by inclement weather and be kept in legible condition. It shall read "OVERSIZE LOAD". A similar sign that is allowed in other states will be accepted. **The sign must be securely attached to the front most portion and rear most portion of the load or vehicle. The sign must be covered or removed when not making an oversize move.**

If a load consists of an over length object such as a pole or beam, the sign need not be seven feet (7’) long but must be of a sufficient size to clearly display the same size lettering as described above.

- **ESCORT VEHICLE REQUIREMENTS:**

Escort vehicles are required when the vehicle and/or load meet or exceed the following dimensions or at the discretion of the Commissioner of Motor Vehicles or his/her authorized representative:

- Wide load of twelve feet (12’) or greater.
- Long load of eighty feet (80’) or greater.
- Overhang of fifteen feet (15’) or greater.

An escort vehicle must be at least the size of a compact car or larger. Escort vehicles must maintain two-way radio contact with the permitted vehicle at all times. The escort vehicle must be equipped with a flashing amber light above the highest point of the vehicle or a combination of lights visible from 360 degrees. An escort vehicle preceding an oversize load shall have a sign on the front reading “OVERSIZE LOAD” and an escort vehicle following shall have a sign on the rear reading “OVERSIZE LOAD”. These signs shall have ten inch (10”) black letters one and one-quarter inch (1¼”) brush stroke on a yellow background at least five feet (5’) long and twelve inches high (12”). Signs must be maintained in a legible condition.

The signs must be covered or removed when the escort vehicle is not accompanying an oversize load.

The escort vehicle must maintain proper spacing between itself and the oversize load so as to adequately warn approaching vehicles.

When one escort is required, it shall precede a load on undivided highways and follow the load on divided highways. Escort vehicle headlights shall be on low beam during all moves.

Annotated Copy

The Commissioner of Motor Vehicles or his/her authorized representative may require two or more escort vehicles.

- **CONVOY OPERATIONS:**

There shall be a minimum spacing of one thousand feet (1,000') between permitted vehicles when two (2) or more permitted vehicles are traveling together.

- **ADMINISTRATIVE PENALTIES:**

BLANKET PERMITS:

Administrative Penalties for Violations of:

1. Providing false information on application.
2. Operation in violation of permit.
3. Continued operation after an order to cease operation(s) has been given.

These violations may result in the following penalties in addition to any other traffic complaints or citations:

- **1st Offense:**
  1. Officer issues Vermont Civil Violation Complaint.
  2. Vehicle may continue after being brought into compliance or new permit issued.
- **2nd Offense Within 1 Year:**
  1. Officer issues Vermont Civil Violation Complaint; permit is voided.
  2. Vehicle may continue after being brought into compliance and a new permit is issued.
- **3rd Offense Within 1 Year:**
  1. Officer issues Vermont Civil Violation Complaint; permit is voided.
  2. Vehicle and load brought into compliance.
  3. 24-hour permit issued.
  4. No permit issued to cited vehicle for fifteen (15) days.
- **4th Offense Within 1 Year:**
  1. Officer issues Vermont Civil Violation Complaint; permit is voided.
  2. Vehicle and load brought into compliance.
  3. Cited vehicle's permit canceled.

Annotated Copy

4. 24-hour permit issued.

5. No Blanket or Single Trip Permit issued to cited vehicle for thirty (30) days.

Emergency Moves

- **INTRODUCTION:**

23 VSA §1400 and §1402 empower the Commissioner of Motor Vehicles to issue overweight or over dimension permits for the operation or movement of a vehicle over state highways and certain town highways in excess of the legal limit. The Commissioner may make rules subject to which the vehicle must be operated. The approval may be given for a limited or unlimited length of time and may be withdrawn for cause. In addition, the Commissioner of Motor Vehicles may deny permits for just cause including, but not limited to, providing false information on applications, continued violation of the rules governing overweight/over dimension operation and/or repeated violation of similar laws or regulations.

The policy of the Department is to give consideration to the safety and convenience of the general public and the protection of the highway systems of this state. The legislature, in setting forth certain statutory limitations, intended to protect the public from hazard and unnecessary inconvenience and to preserve the highways.

- **DEFINITION:**

For the purpose of these permits, an emergency is defined as follows:

> "*A calamity, existing or imminent, which requires immediate remedial action to protect life, property and the environment*". The fact a contractor or mover is being delayed in the execution of a job or contract or has a crew waiting for a piece of equipment is not sufficient justification for an emergency permit.

The request must be based upon such an emergency condition. If it is necessary to make an emergency move at a time the Department of Motor Vehicles is closed, the applicant must contact the Department of Public Safety, Central Communications Center, 802-244-8727, Waterbury, Vermont and give a brief description of the emergency. The Department of Public Safety will contact the authorized official for the Department of Motor Vehicles and provide information on the nature of the emergency.

- **PROCEDURE:**

The following procedure must be followed and the permit number issued prior to the move.

a. The person requesting the permit must provide the following information:

   1. Reason for the emergency move request.

   2. Complete name of mover.

Annotated Copy

3. Description of load.

4. Overall dimensions and weight of vehicle and load.

5. Description of towing vehicle and trailer.

6. Total number of axles.

7. Axle spacing.

8. Tire sizes (weight in excess of eighty thousand [80,000] pounds).

9. Exact location of load.

10. Exact destination.

11. All routes requested.

12. Any additional information requested by the authorized Department of Motor Vehicles official.

b. The Department of Motor Vehicles authorized official will contact the Agency of Transportation for restrictions on bridges and road conditions when appropriate.

Authorized Official: Vermont Agency of Transportation

c. Based on the information provided, the authorized Department of Motor Vehicle official will determine any special restrictions to be attached to the permit.

1. The mover will be issued a special number preceded by the initials of the authorizing official.

2. The mover may be assessed a fee.

3. The authorized official will be responsible for notifying pertinent state and local law enforcement of the conditions of the move.

Authorized Official: Vermont Department of Motor Vehicles Commissioner or his/her designee

- **ADMINISTRATIVE PENALTIES:**

MULTIPLE CONVICTIONS OF VIOLATIONS

SINGLE TRIP PERMITS:

Administrative Penalties for Violations of:

1. Providing false information on the application.

2. Operation in violation of the permit.

Annotated Copy

3. Continued operation after an order to cease operation(s) has been given.

These violations may result in the following penalties in addition to any other traffic complaints or citations:

- **1st Offense:**

  1. Officer issues Vermont Civil Violation Complaint.
  2. Vehicle may continue after being brought into compliance or new permit issued.

- **2nd Offense Within 1 Year:**

  1. Officer issues Vermont Civil Violation Complaint; permit is voided.
  2. Vehicle may continue after being brought into compliance and new permit is issued.

- **3rd Offense Within 1 Year:**

  1. Officer issues Vermont Civil Violation Complaint; permit is voided.
  2. Vehicle and load brought into compliance.
  3. 24-hour permit issued.
  4. No Single Trip Permit issued to cited vehicle for fifteen (15) days.

- **4th Offense Within 1 Year:**

  1. Officer issues Vermont Civil Violation Complaint; permit is voided.
  2. Vehicle and load brought into compliance.
  3. 24-hour permit issued.
  4. No Single Trip Permit issued to cited vehicle for thirty (30) days.

Annotated Copy

Farm Equipment Dealer Permits

- **INTRODUCTION:**

23 VSA §1400 and §1402 empower the Commissioner of Motor Vehicles to issue overweight or over dimension permits for the operation or movement of a vehicle over state highways and certain town highways in excess of the legal limit. The Commissioner may make rules subject to which the vehicle must be operated. The approval may be given for a limited or unlimited length of time and may be withdrawn for cause. In addition, the Commissioner of Motor Vehicles may deny permits for just cause including, but not limited to, providing false information on applications, continued violation of the rules governing overweight/over dimension operation and/or repeated violation of similar laws or regulations.

The policy of the Department is to give consideration to the safety and convenience of the general public and the protection of the highway systems of this state. The legislature, in setting forth certain statutory limitations, intended to protect the public from hazard and unnecessary inconvenience and to preserve the highways.

- **DEFINITION:**

The Commissioner of Motor Vehicles, or his/her representative, upon application, may issue annually to dealers in farm tractors or other farm implements, over width permits to transport or draw upon a highway such farm implements as are incidental to the conduct of such business.

- **WHERE TO APPLY:**

Applications are primarily accepted through the mail or in person and may be obtained from:

Commercial Vehicle Operations
Department of Motor Vehicles
120 State Street
Montpelier, VT 05603-0001

Phone: 802-828-2064
Fax: 802-828-5418
DMV.CommercialVehicleOSOWPermitting@vermont.gov
dmv.vermont.gov

~~Commercial Vehicle Operations Unit~~
~~Department of Motor Vehicles~~
~~120 State Street~~
~~Montpelier, VT 05603-0001~~

~~Phone: 802-828-2064~~
~~Fax: 802-828-5418~~
~~DMV Website: dmv.vermont.gov~~

- ~~**FEES:**~~

~~$100.00 for the first unit, $5.00 for each additional unit up to $1,000.00.~~

- **EXPIRATION:**

Farm Dealer Permits expire with the vehicles registration.

- **REGISTRATION:**

When operation occurs using "Farm Dealer" plates permits are only valid for uses permitted under 23 VSA §454, Dealer's use of motor vehicles.

- **HOURS OF OPERATION:**

Operation will be during the time from sunrise to sunset. No vehicles, implements or combination thereof shall be operated on any highway on a legal holiday, except on trips not in excess of two (2) miles, nor upon any highway at any time on which operation is prohibited by order of the Commissioner or his/her representative.

- **MAXIMUM WIDTH**:

Annotated Copy

Thirteen feet (13') – Farm Equipment Dealers ONLY

- **FLAG REQUIREMENTS:**

  From sunrise to sunset, at least two (2) bright or fluorescent red or orange flags not smaller than eighteen inches (18") square must be displayed on the left front and rear of the vehicle or implement or combination during the period thereof in such a manner as to be clearly visible from the front and rear for a distance of at least five hundred feet (500'). If equipment is manufactured with lights and brakes both must be in working order, other equipment must display a safety triangle on the rear.

- **DEPARTMENT JURISDICTION:**

  The permit will be effective only insofar as the Department has jurisdiction and authority and it does not release the applicant from complying with other existing laws, local ordinances or conditions which may govern the movement.

- **ADMINISTRATIVE PENALTIES:**

  BLANKET PERMITS:

  Administrative Penalties for Violations of:

  1. Providing false information on application.
  2. Operation in violation of permit.
  3. Continued operation after an order to cease operation(s) has been given.

  These violations may result in the following penalties in addition to any other traffic complaints or citations:

  - **1st Offense:**
    1. Officer issues Vermont Civil Violation Complaint.
    2. Vehicle may continue after being brought into compliance or new permit issued.
  - **2nd Offense Within 1 Year:**
    1. Officer issues Vermont Civil Violation Complaint; permit is voided.
    2. Vehicle may continue after being brought into compliance and a new permit is issued.
  - **3rd Offense Within 1 Year:**
    1. Officer issues Vermont Civil Violation Complaint; permit is voided.
    2. Vehicle and load brought into compliance.
    3. 24-hour permit issued.

Annotated Copy

4. No permit issued to cited vehicle for fifteen (15) days.

- **4th Offense Within 1 Year:**

1. Officer issues Vermont Civil Violation Complaint; permit is voided.
2. Vehicle and load brought into compliance.
3. Cited vehicles permit canceled.
4. 24-hour permit issued.
5. No Blanket or Single Trip Permit issued to cited vehicle for thirty (30) days.

REASONABLE ACCESS PERMITS

- **INTRODUCTION:**

23 VSA §1400 and §1402 empower the Commissioner of Motor Vehicles to issue overweight or over dimension permits for the operation or movement of a vehicle over state highways and certain town highways in excess of the legal limit. The Commissioner may make rules subject to which the vehicle must be operated. The approval may be given for a limited or unlimited length of time and may be withdrawn for cause. In addition, the Commissioner of Motor Vehicles may deny permits for just cause including, but not limited to, providing false information on applications, continued violation of the rules governing overweight/over dimension operation and/or repeated violation of similar laws or regulations.

The policy of the Department is to give consideration to the safety and convenience of the general public and the protection of the highway systems of this state. The legislature, in setting forth certain statutory limitations, intended to protect the public from hazard and unnecessary inconvenience and to preserve the highways.

- **PERMITS REQUIRED:**

REASONABLE ACCESS UNDER FEDERAL LAW:

Federal law requires that reasonable access be granted to vehicles with dimensions authorized by the Surface Transportation Assistance Act of 1982 to operate between the National Network (which includes the Interstate System highways as well as qualifying Federal-aid Primary System highways as designated by the Secretary of the United States Department of Transportation and the Secretary of the Vermont Agency of Transportation) and terminals and facilities for food, fuel, repairs, and rest. Federal law also requires reasonable access between the National Network and points of loading and unloading for household goods carriers, motor carriers of passengers, and commercial motor vehicle combinations consisting of a truck tractor with two trailing units that meet certain criteria.

Annotated Copy

REASONABLE ACCESS PERMITS:

A reasonable access permit is a written authorization of the Commissioner of Motor Vehicles when a truck tractor, semi-trailer, or trailer combination as set forth below exits the National Network in Vermont identified in 23 CFR Part 658, Appendix A, as authorized under federal reasonable access rules.

Reasonable access permits are required:

(1) For truck tractor - semi-trailer - trailer combinations. Neither a trailer nor a semi-trailer in these combinations may exceed twenty-eight feet (28').

(2) To authorize access to RT4 from the New Hampshire line to the junction of RT100 south for certain automobile transportation vehicles (stinger steer) up to seventy-five feet (75') in length, and for household goods haulers up to seventy-two feet (72') in length.

The National Network in Vermont, as contained in 23 CFR Part 658, Appendix A, is as follows:

- The entire Interstate System: I-89, I-91, I-93 and I-189
- US 4 from the New York State Line to Rutland City's eastern Boundary
- US 7 from the end of the 4-lane divided highway in Wallingford to US 4 North Intersection in Rutland
- VT 9 from 1-91 intersection 3 North of Brattleboro to the New Hampshire State Line

EXCEPTIONS:

A permit shall not be required in order to operate a vehicle described in the "Reasonable Access Permits" section of these rules as follows:

- On public highways within a one-quarter mile radius of Exit Number 21 on 1-89 in Swanton.
- From Exit Number 8 on I-91 in Brattleboro, northerly on US Route 5 to its intersection with Ferry Road and then easterly on Ferry Road to the entrance to C&S Wholesale Grocers, Inc.
- From Exit Number 3 on I-91 in Brattleboro, easterly on VT Route 9 to the New Hampshire State Line.
- From the terminus of the four-lane divided highway in Wallingford northerly on US Route 7 to US Route 4 in Rutland.
- From the New York State Line easterly on US Route 4 to the Eastern city limit of the City of Rutland.
- On public highways within a one mile radius of the following exits on the Interstate Highway System.

Annotated Copy

Interstate 91						
County	Location	mi	km	Exit	Destinations	Notes
		0.000	0.000	Massachusetts–Vermont state line		
Windham	Brattleboro	7.480	12.038	1	US 5 to VT 142 – Brattleboro, Guilford	Also serves Vernon and Hinsdale, NH
		11.550	18.588	3	US 5 / VT 9 east – Brattleboro, Keene, NH	Also serves World Learning SIT Graduate Institute
	Rockingham	35.200	56.649	6	US 5 / VT 103 – Rockingham, Rutland, Bellows Falls	Also serves Chester and Ludlow
Windsor	Springfield	41.690	67.094	7	US 5 / VT 11 – Springfield	Also serves Charlestown, NH and the Fort at Number 4
	Hartford	70.200	112.976	11	US 5 – White River Junction	
	Fairlee	91.540	147.319	15	US 5 – Fairlee, Orford, NH	Also serves Lake Morey and Lake Fairlee
	Bradford	97.630	157.120	16	VT 25 to US 5 – Bradford, Barre	Also serves Newbury and Piermont
	Town of Newbury	110.340	177.575	17	US 302 to US 5 – Wells River, Woodsville, NH	Also serves South Ryegate and Groton
	St. Johnsbury	128.890	207.428	20	US 5 – St. Johnsbury, Passumpsic	
	Lyndon	137.110	220.657	23	US 5 to VT 114 – Lyndonville, East Burke	Also serves Lyndon State College
	Barton–Orleans–Irasburg	161.410	259.764	26	US 5 / VT 58 – Orleans, Irasburg	Also serves Lake Willoughby and Jay
	Derby	172.400	277.451	28	US 5 / VT 105 – Newport, Derby Center	Also serves Seymour Lake and Lake Memphremagog
	Derby Line	177.432	285.549	—	A-55 north – Stanstead	Continuation into Quebec

Annotated Copy

Interstate 89						
County	Location	mi	km	Exit	Destinations	Notes
Connecticut River		0.000	0.000		Vietnam Veterans Memorial Bridge	
Windsor	Quechee	3.930	6.325	1	US 4 – Woodstock, Rutland, Quechee	Also serves Killington
	Sharon	13.420	21.597	2	VT 132 to VT 14 – Sharon, South Royalton	
Orange	Randolph	30.900	49.729	4	VT 66 to VT 12 – Randolph	
Washington	Middlesex	58.720	94.501	9	US 2 to VT 100B – Middlesex, Moretown	Also serves Waitsfield, Warren, and Mad River Byway
	Waterbury	63.760	102.612	10	VT 100 to US 2 – Waterbury, Stowe	Also serves Bolton, Waitsfield, and Warren
Chittenden	Richmond	78.410	126.189	11	US 2 to VT 117 – Richmond, Williston, Bolton	
	Williston	83.960	135.121	12	VT 2A to US 2 / VT 116 – Williston, Essex Junction	Also serves Hinesburg and Bristol
	Colchester	91.490	147.239	16	US 2 / US 7 to VT 15 – Winooski, Colchester	Also serves Malletts Bay, Albany College of Pharmacy and Health Sciences, and Essex Junction
		97.870	157.506	17	US 2 / US 7 – Lake Champlain Islands, Milton, Colchester	Also serves New York State via ferry or bridge
Franklin	Georgia	106.550	171.476	18	US 7 / VT 104A – Georgia Center, Fairfax, Milton	
	Town of St. Albans	113.750	183.063	19	US 7 / VT 36 / VT 104 – St. Albans	Also serves VT 105 to Enosburg and Richford
		117.630	189.307	20	US 7 / VT 207 – St. Albans	
	Highgate	130.254	209.623	–	Route 133 north to A-35 – Bedford, Montreal	Continuation into Quebec, Canada; future connection with A-35

- **WHERE TO APPLY:**

Applications are primarily accepted through the mail or in person and may be obtained from:

Commercial Vehicle Operations
Department of Motor Vehicles
120 State Street
Montpelier, VT 05603-0001

Phone: 802-828-2064
Fax: 802-828-5418
DMV.CommercialVehicleOSOWPermitting@vermont.gov
dmv.vermont.gov

~~Commercial Vehicle Operations Unit~~
~~Department of Motor Vehicles~~
~~120 State Street~~
~~Montpelier, VT 05603-0001~~

~~Phone: 802-828-2064~~
~~Fax: 802-828-5418~~
~~DMV Website: dmv.vermont.gov~~

- ~~**FEE:**~~

Annotated Copy

~~No fee.~~

- **EXPIRATION:**

  Reasonable Access Permits expire annually on March 31st.

- **PERMITS ISSUED TO MOVER:**

  Permits will be issued only to the person or firm who will actually be doing the transporting of vehicle and load.

- **CARRYING PERMITS:**

  The permit, or a legible permit facsimile, must be carried in the vehicle. The permit shall be available for inspection by any enforcement officer or representative of the Department of Motor Vehicles or Agency of Transportation empowered to issue such permit during movement authorized by the permit.

- **DEPARTMENT JURISDICTION:**

  The permit will be effective only insofar as the Department has jurisdiction and authority and it does not release the applicant from complying with other existing laws, local ordinances or conditions which may govern the movement.

- **COMPLIANCE WITH LAWS:**

  The acceptance of a permit by the applicant is his/her agreement that the vehicle or object can and will be moved strictly in compliance with the terms and the conditions set forth in the permit. This includes regulations listed on or accompanying the permit, the DMV Rule and with the conditions that the operator and vehicles are properly licensed and the applicant has complied with all legal requirements imposed by the Vermont Motor Vehicle laws.

- **RESPONSIBILITY:**

  The applicant shall assume all responsibility for injury to persons or damage to public or private property caused directly or indirectly by the transportation of vehicle or loads under the permit. Furthermore, the applicant agrees to hold the State of Vermont, Agency of Transportation, and the Department of Motor Vehicles harmless from all suits, claims, damages or proceedings of any kind as a direct or indirect result of the transportation of the vehicle and/or load.

- **VIOLATION OF PERMIT CONDITIONS:**

  A Reasonable Access Permit, may be voided and confiscated by any law enforcement officer and is automatically invalidated for the trip by the violation of any condition specified in the terms of the permit, these rules and regulations or by false information given on the application.

Annotated Copy

Single Trip Permits

- **INTRODUCTION:**

23 VSA §1400 and §1402 empower the Commissioner of Motor Vehicles to issue overweight or over dimension permits for the operation or movement of a vehicle over state highways and certain town highways in excess of the legal limit. The Commissioner may make rules subject to which the vehicle must be operated. The approval may be given for a limited or unlimited length of time and may be withdrawn for cause. In addition, the Commissioner of Motor Vehicles may deny permits for just cause including, but not limited to, providing false information on applications, continued violation of the rules governing overweight/over dimension operation and/or repeated violation of similar laws or regulations.

The policy of the Department is to give consideration to the safety and convenience of the general public and the protection of the highway systems of this state. The legislature, in setting forth certain statutory limitations, intended to protect the public from hazard and unnecessary inconvenience and to preserve the highways.

- **PERMITS REQUIRED:**

Permits are required when the following dimensions or weights specified by Vermont statutes are exceeded.

Width		Height
8’ 6” – All Highways		13’ 6” – All Highways
Length		
Single Vehicles	46’	All Highways
Combination Vehicles	75’	All Highways
Combination Vehicles	68’ – 72’	RT 4 from the New Hampshire line to the Junction of RT 100S

- **Note:** There is no overall length limit for combination vehicles on the National Network (primarily interstate highways); however there are limits on semi-trailer and trailer lengths. A semi-trailer in a truck tractor semi-trailer combination may not exceed fifty-three feet (53’) and no trailer or semi-trailer in a truck tractor semi-trailer trailer combination may exceed twenty-eight feet (28’).

Annotated Copy

Weight
State Highways and Class 1 Town Highways: Permits are issued by the state. Permits are required when weights exceed statutory limits provided by 23 VSA Chapter 13, Subchapter 15.
Class 2, 3 and 4 Plus Other Posted Town Highways: Permits are issued by the municipality. Permits are required when weights exceed statutory limits provided by 23 VSA Chapter 13, Subchapter 15.

- **PERMITS FOR WEIGHT:**

  When considering permits for weight up to one hundred fifty thousand (150,000) pounds the Department may consider the application within the Department if there are sufficient axles on the vehicle to distribute the weight at the rate of twenty thousand (20,000) pounds per axle with dual wheels and twelve thousand (12,000) pounds per axle with single wheels, commonly steering axles. If the weight exceeds a total that can be covered by this formula it will be denied. Further consideration may require additional information or an engineering review.

- **DEFINITION – SINGLE TRIP PERMIT:**

  A Single Trip Permit is the written or oral authorization granted by the Commissioner of the Department of Motor Vehicles for the movement of a nondivisible load between specified points over a predetermined route prescribed by the Commissioner or his/her authorized representative.

- **DEFINITION – NONDIVISIBLE LOADS:**

  Single trip permits are issued for nondivisible loads. For this purpose "*nondivisible*" means any load or vehicle exceeding applicable dimension or weight limits which, if separated into smaller loads or vehicles, would:

  1. Compromise the intended use of the vehicle, i.e., make it unable to perform the function for which it was intended;

  2. Destroy the value of the load or vehicle, i.e., make it unusable for its intended purpose; or

  3. Require more than eight (8) work hours to dismantle using appropriate equipment. The applicant for a nondivisible load permit has the burden of proof as to the number of work hours required to dismantle the load.

     - **Note:** Nondivisible does not prohibit the movement of more than one piece when the permit is issued for the largest piece and additional pieces do not cause the total load to exceed a dimension already allowed by the permitting of the original piece. For instance a permit issued for an ~~overwidth~~ over width wooden truss would remain valid if a number of trusses were piled on but that action did not cause the load to exceed the width of the original truss or cause the load to be overlength, ~~overheight~~ over height, or overweight.

- **SPECIAL OVERSIZE TRAILERS – DEFINITION; SINGLE TRIP PERMITS AVAILABLE UNDER LIMITED CIRCUMSTANCES:**

Annotated Copy

Special Oversize Trailers or semi-trailers that are over legal length or width. The length or width in excess of legal dimensions is required to move certain oversize loads.

Single Trip Permits are required and are the only permits available for special oversize trailers with two (2) exceptions for which Blanket Permits may be issued.

1. Trailers actually registered on September 1, 1994 and subsequently renewed only by that registrant.

   If ownership of the trailer is transferred, it no longer falls under the so-called "grandfather" clause. Single Trip Permits would be issued for the delivery of oversize loads that require an oversize trailer and for the dispatch and return of the trailer. Single Trip Permits would also be issued for the movement of empty trailers for repairs or for some similar purposes.

2. The second exception is for trailers or semi-trailers designed and used to transport highway building equipment and road making appliances.

- **WHERE TO APPLY:**

Applications are primarily accepted by fax if an escrow account containing adequate funds is in place, or from a private commercial permit service. Permits may also be obtained through the mail. When a fee is required, the Commercial Vehicle Operations Unit will accept checks and money orders in US funds only. In certain unusual circumstances it may be possible for an escrow account holder to obtain a permit by phone.

If a private commercial permit service is used, the permit service must have established an escrow account with the Commercial Vehicle Operations Unit. The escrow account must have adequate funds to cover the transaction. These permit services can forward applications by fax or phone. The applicant will pay all state fees and the permit service's processing charges as required. Generally they will accept credit cards as well as other means of payment.

Applications may be obtained from:

Commercial Vehicle Operations
Department of Motor Vehicles
120 State Street
Montpelier, VT 05603-0001

Phone: 802-828-2064
Fax: 802-828-5418
DMV.CommercialVehicleOSOWPermitting@vermont.gov
dmv.vermont.gov

~~Commercial Vehicle Operations Unit~~
~~Department of Motor Vehicles~~
~~120 State Street~~
~~Montpelier, VT 05603-0001~~

~~Phone: 802-828-2064~~
~~Fax: 802-828-5418~~
~~DMV Website: dmv.vermont.gov~~

- ~~**FEE:**~~

~~$35.00~~

- **EXPIRATION:**

Annotated Copy

Single Trip Permits may be issued to cover a single trip within ~~ten (10) working~~ seven (7) business days of issuance. When the trip will exceed the ~~ten (10) working~~ seven (7) business day limit, a new permit will be required. Extensions of time may be granted at the discretion of the Commissioner of Motor Vehicles or his/her authorized representative.

- **SPECIAL SIZE RESTRICTIONS:**

  - **Length:** The maximum overhang shall not exceed one-third of the length of the load. No over length load shall be permitted to drag upon the roadway.

  - **Width (Eaves Overhang):** For modular and mobile homes, an additional six inches (6") of overhang for eaves only will be allowed. See Figure 1.

- **PERMITS ISSUED TO MOVER:**

  Permits will be issued only to the person or firm who will actually be doing the transporting of vehicle and load.

- **PERMIT ISSUANCE:**

  Permits shall be issued to a truck and shall cover any properly registered trailer which has the required number of axles and proper axle spacing to legally meet the road limit in accordance with 23 VSA 1392 (4).

- **REGISTRATION:**

  Vehicles with special purpose plates such as dealer's plates or contractor's road building registrations or agricultural registration operating under a permit are covered by only such use as is allowed by law. An out-of-state registration does not allow a vehicle to transport property between points in the State of Vermont unless properly registered under the International Registration Plan (IRP), if applicable. An IFTA (International Fuel Tax Agreement) decal may also be required.

- **TOWING VEHICLE (SIZE & LIGHTS):**

  All over legal size mobile homes or modular units shall be towed by a minimum size vehicle with a GVWR of not less than twenty-four thousand (24,000) pounds with dual wheels. In addition to the aforementioned, all moves of over dimension loads shall require a flashing amber light above the highest point of the towing vehicle.

- **ONLY ONE VEHICLE ON A PERMIT:**

  Only one vehicle or combination vehicle will be allowed on each permit.

- **SATURDAY, SUNDAY AND HOLIDAY OPERATIONS:**

  On state highways unless otherwise stated, permits will not be issued for movement of loads in excess of one hundred eight thousand (108,000) pounds, or over ~~ten feet, six inches (10' 6")~~ twelve feet (12'0") wide or over one hundred feet (100') long on any Saturday, Sunday, ~~any Friday afternoon~~

Annotated Copy

~~between July 1 and Labor Day,~~ or on the following legal holidays as observed in the State of Vermont:

- New Year's Day: January 1st
- ~~Martin Luther King Day: 3rd Monday in January~~
- ~~President's Day: 3rd Monday in February~~
- Memorial Day: Last Monday in May
- Independence Day: July 4th
- Labor Day: 1st Monday in September
- ~~Columbus Day: 2nd Monday in October~~
- ~~Veteran's Day: November 11th~~
- Thanksgiving Day: 4th Thursday in November
- Christmas Day: December 25th

~~If a holiday falls on a Saturday, the preceding Friday is a legal holiday; if a holiday falls on a Sunday, the following Monday is a legal holiday and these days are restricted as other holidays.~~

The Commissioner of Motor Vehicles may further restrict the movement of over-legal size vehicles before and after certain holidays if deemed necessary.

- **HOURS OF OPERATION:**

Unless specifically stated on the permit, travel with vehicles and/or loads which are over width, over length or over height shall be restricted to daylight hours and movement shall be made between thirty (30) minutes before sunrise and thirty (30) minutes after sunset. Vehicles, which are overweight only and are capable of traveling with the traffic flow, are not restricted to daylight travel time.

On highways where traffic is heavy during certain hours, it may be necessary to further restrict the movement to certain hours of the day or to certain days of the week.

- **INCLEMENT WEATHER:**

- For loads 12' wide or greater, and/or 80' long or greater:

No travel is allowed during any ice condition, sleet, freezing rain, slush or combination thereof or any snow accumulation to the extent that it is heavy enough to stick to the highway surface~~.~~; and ~~Also,~~ no travel is allowed ~~during any period of rain or other weather that requires the use of windshield wipers in the "steady" on position by users of the highway, or~~ when visibility is reduced by rain, fog or any other weather condition ~~of the conditions previously listed~~ to the extent that the load is not readily identifiable by users of the highway at a distance of a quarter (¼) mile. At all times roads must be safe and clear enough to allow traffic to pass. ~~Roads must be clear and free of water which causes spray or mist that interferes with the visibility of other vehicles.~~

When such conditions exist during a trip, permitted vehicles must exit the road at the first available safe location where vehicle and load can park without impeding traffic until the weather conditions clear ~~and/or until the road conditions improve~~. A vehicle is not permitted to travel during inclement weather if it is subject to, or was required to have, an engineering review.

- **SPEED:**

Annotated Copy

The Commissioner may prescribe maximum speeds below legal limits for hazardous loads or conditions. State highways speed is limited to forty-five (45) miles per hour for loads in excess of ninety thousand (90,000) pounds or ten feet (10') in width or thirteen feet, six inches (13' 6") in height or seventy-five feet (75') in length. Interstate highways maximum speed shall be sixty (60) miles per hour unless otherwise specified. Speed may be restricted further on specific roads or portions of roads as required to ensure safe movement of over dimension loads.

- **POSTED ROADS:**

During winter thaws, rainy periods or when frost begins to melt, the Agency of Transportation may post state highways; permits **DO NOT** ~~supercede~~ supersede road postings.

- **CONVOY OPERATION:**

There shall be a minimum spacing of one thousand feet (1,000') between permitted vehicles when two or more permitted vehicles are traveling together.

- **PERMISSION FROM CITIES/TOWNS:**

  - **OVERWEIGHT:**

    For operation of a vehicle in excess of the statutory weight limits over highways and bridges under the jurisdiction of a municipality, except Class 1 town highways, application will be made to the appropriate legislative body or its representative. A list of any special weight limits which differ from statutory limits is available from the Department of Motor Vehicles along with the name of the person responsible for issuing permits in each municipality.

  - **OVERDIMENSION:**

    For operation, on highways under the jurisdiction of a municipality, of a vehicle and load in excess of the statutory dimensions, but within the dimensions allowed under a "Blanket Permit", permits may be issued by the Department of Motor Vehicles, Commercial Vehicle Operations Unit. For operation of a vehicle and load in excess of the dimensions allowed under a blanket permit (see note), permits are issued by the municipality. Application is made to the appropriate legislative body or their representative.

    - **Note: Blanket Permit Dimensions:**

      1. Maximum Width: Ten feet, six inches (10' 6") when the length is greater than ~~**sixty-eight feet (68')**~~ **seventy-five feet (75')** up to one hundred feet (100').
      2. Maximum Width: Twelve feet, six inches (12' 6") when the length does not exceed ~~**sixty-eight feet (68')**~~ **seventy-five feet (75')**.
      3. Maximum Height: Fourteen feet (14').
      4. Maximum Length: Vehicles without a trailer or semi-trailer (single vehicle) is forty-six feet (46').

- **ROUTINGS:**

Annotated Copy

All loads shall be routed over the widest roads available and great care shall be exercised in selecting the proper route of travel. Each permit shall designate the routes or areas to be traveled and may contain special restrictions.

- **DIRECT ROUTING:**

The Department, in considering whether to issue or deny a permit, shall consider among other issues the most "direct route" reasonably available for the move both through and outside Vermont. In determining the most "direct route", the safety issues affected by the load, vehicle, roadway, traffic, time of day and volume of moves as well as the straightest line between point of origin and destination shall be considered.

Direct routing is defined as the safest most geometrically suitable road network, which is closest to a straight line, projected between the point of origin and the final destination of the load.

Vermont **MAY** consider allowing a load through Vermont, not on direct routing, **ONLY** if another state or states along the direct route have denied the request for a permit due to inadequate routes to accommodate the load.

In such instance, a letter from the denying state or states specifying the reasons for the denial and signed by an authorized state official shall be submitted to the Vermont Department of Motor Vehicles Commercial Vehicle Operations Unit along with the application for an oversize permit.

- **Note: A higher engineering fee or permit fee in a state on the direct route is not sufficient reason for requesting routing through Vermont and such request will be automatically denied.**

The Commissioner of Motor Vehicles or his/her representative retains the right to restrict or deny movement over certain routes.

- **SIGNS/SIGN REQUIREMENTS:**

Oversize load sign required:

- For over eight feet, six inches (8' 6") width.
- For over thirteen feet, six inches (13' 6") height.
- For over seventy-five feet (75') in length.

This sign shall be at least seven feet (7') long by eighteen inches (18") high with yellow background and black lettering. Letters shall be at least ten inches (10") high with a one and one-quarter inch (1¼") brush stroke. The sign shall be made of durable material that will not be affected by inclement weather and be kept in legible condition. It shall read "OVERSIZE LOAD". A similar sign that is allowed in other states will be accepted. **The sign must be securely attached to the front most portion and rear most portion of the load or vehicle. The sign must be covered or removed when not making an oversize move.**

Annotated Copy

If a load consists of an over length object such as a pole or beam, the sign need not be seven feet (7') long but must be of a sufficient size to clearly display the same size lettering as described above.

- **ESCORT VEHICLE REQUIREMENTS:**

Escort vehicles are required when the vehicle and/or load meet or exceed the following dimensions or at the discretion of the Commissioner of Motor Vehicles or his/her authorized representative:

- Wide load of twelve feet (12') or greater.
- Long load of eighty feet (80') or greater.
- Overhang of fifteen feet (15') or greater.

An escort vehicle must be at least the size of a compact car or larger. Escort vehicles must maintain two-way radio contact with the permitted vehicle at all times. The escort vehicle must be equipped with a flashing amber light above the highest point of the vehicle or a combination of lights visible from 360 degrees. An escort vehicle preceding an oversize load shall have a sign on the front reading "OVERSIZE LOAD" and an escort vehicle following shall have a sign on the rear reading "OVERSIZE LOAD". These signs shall have ten inch (10") black letters one and one-quarter inch (1¼") brush stroke on a yellow background and be at least five feet (5') long and twelve inches (12") high. Signs must be maintained in a legible condition.

The signs must be covered or removed when the escort vehicle is not accompanying an oversize load.

The escort vehicle must maintain proper spacing between itself and the oversize load so as to adequately warn approaching vehicles.

When one escort is required, it shall precede a load on undivided highways and follow the load on divided highways. Escort vehicle headlights shall be on low beam during all moves.

The Commissioner of Motor Vehicles or his/her authorized representative may require two or more escort vehicles.

- **POLICE ESCORT:**

At the discretion of the Commissioner of Motor Vehicles or his/her authorized representative one or more police escorts may be required.

The police escort shall be responsible to ensure the vehicle and load are transported within the permitted restrictions and for the overall safe movement of the load, including the control of oncoming traffic to avoid incidents or accidents. The police escort shall be responsible to orally review the permit restrictions with the oversize load driver(s) and the escort vehicle driver(s) and shall be responsible to ensure two-way inter-vehicle radio communication is maintained throughout the trip. In the event of an emergency occurring during the move the police escort shall contact the Commercial Vehicle Operations Unit at 802-828-2064 or contact the nearest State Police Dispatch.

- **FLAGGERS:**

Annotated Copy

Flaggers, wearing reflective traffic vests, may be required for over dimension or overweight loads. The purpose of the flagger is to protect traffic when entering or leaving main highways and to assist the driver at locations where visibility is reduced or obscured.

- **FLAGS/LIGHTS:**

Flags are required on all oversize loads. The flag must be bright or fluorescent red or orange and have a minimum size of eighteen inches by eighteen inches (18" x 18"). They shall be displayed on all four corners (or as close as practicable) of all loads or vehicles that exceed the legal dimensions. Flags shall be in such condition as to be easily distinguished from a reasonable distance. All warning flags shall be secured by at least one corner or mounted on a staff.

1. Over Width Loads: At least four (4) flags mounted at the corners of the vehicle if the vehicle is oversize and at the corners of the load if the load is oversize. In cases of irregular shaped loads such additional flags as may be necessary to mark the widest extremities of the load.

2. Over length loads or loads with rear or front end overhang in excess of four feet (4') shall display one flag at the end of the overhang if less than two feet (2') wide and two (2) flags if the overhang is two feet (2') wide or more.

3. Commercial motor vehicles defined in 49 CFR 390.5; Such vehicles must have lights installed and operable on the projecting loads as required by 49 CFR 393.11 Footnotes 9 & 10.

- **USE OF TRAVEL LANES:**

When two or more lanes are available in one direction, vehicles shall travel in the right lane except in an emergency or to comply with any other restrictions established by the state.

- **SLOW MOVING VEHICLES:**

All slow moving vehicles shall keep as close to the right hand side of the highway as practicable. A person operating a motor vehicle impeding other traffic on a highway shall pull off the highway at the first safe haven to allow the traffic to pass before proceeding.

- **PARKED OVERSIZE LOADS:**

Any oversize load, when parked at other than its place of origin or destination, shall conspicuously display the name and telephone number of a party that, at all hours can see to its immediate removal or security if needed. These markings shall be easily legible.

- **DEPARTMENT JURISDICTION:**

The permit will be effective only insofar as the Department has jurisdiction and authority and does not release the applicant from complying with other existing laws, local ordinances or conditions which may govern the movement.

- **COMPLIANCE WITH LAWS:**

Annotated Copy

The acceptance of a permit by the applicant is his/her agreement that the vehicle or object can and will be moved strictly in compliance with the terms and the conditions set forth in the permit. This includes regulations listed on or accompanying the permit, the DMV Rule and with the conditions that the operator and vehicles are properly licensed and the applicant has complied with all legal requirements imposed by the Vermont Motor Vehicle laws.

- **RESPONSIBILITY:**

The applicant shall assume all responsibility for injury to persons or damage to public or private property caused directly or indirectly by the transportation of vehicle or loads under the permit. Furthermore, the applicant agrees to hold the State of Vermont, Agency of Transportation, and the Department of Motor Vehicles harmless from all suits, claims, damages or proceedings of any kind as a direct or indirect result of the transportation of the vehicle and/or load.

- **VIOLATION OF PERMIT CONDITIONS:**

A Single Trip Permit may be voided and confiscated by any law enforcement officer and is automatically invalidated for the trip by the violation of any condition specified in the terms of the permit, these rules and regulations or by false information given on the application.

- **ADMINISTRATIVE PENALTIES:**

MULTIPLE CONVICTIONS OF VIOLATIONS

SINGLE TRIP PERMITS:

Administrative Penalties for Violations of:

1. Providing false information on the application.
2. Operation in violation of the permit.
3. Continued operation after an order to cease operation(s) has been given.

These violations may result in the following penalties in addition to any other traffic complaints or citations:

- **1st Offense:**
  1. Officer issues Vermont Civil Violation Complaint.
  2. Vehicle may continue after being brought into compliance or new permit issued.
- **2nd Offense Within 1 Year:**
  1. Officer issues Vermont Civil Violation Complaint; permit is voided.
  2. Vehicle may continue after being brought into compliance and new permit is issued.
- **3rd Offense Within 1 Year:**

Annotated Copy

1. Officer issues Vermont Civil Violation Complaint; permit is voided.
2. Vehicle and load brought into compliance.
3. 24-hour permit issued.
4. No Single Trip Permit issued to cited vehicle for fifteen (15) days.

- **4th Offense Within 1 Year:**

1. Officer issues Vermont Civil Violation Complaint; permit is voided.
2. Vehicle and load brought into compliance.
3. 24-hour permit issued.
4. No Single Trip Permit issued to cited vehicle for thirty (30) days.

FIGURE 1 – MAXIMUM SIZE LIMITS

Length: 90' – 0" or less
Height: 13' – 6" or less
Width: 14' – 0" or less

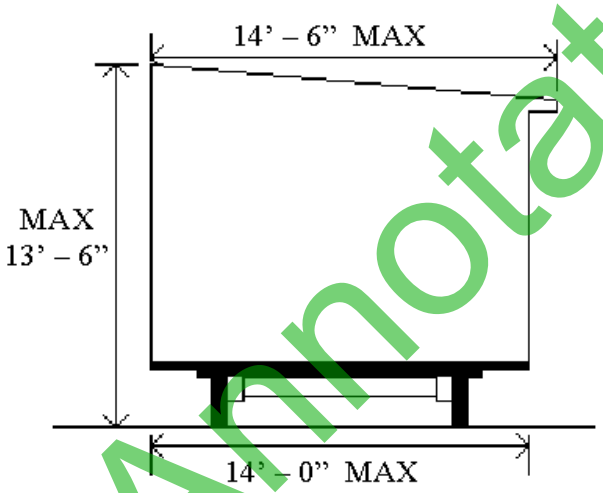

For **Modular** and **Mobile homes** an additional 6" of overhang for eaves only will be allowed providing the greater overhang is on the right-hand shoulder side of the highway.

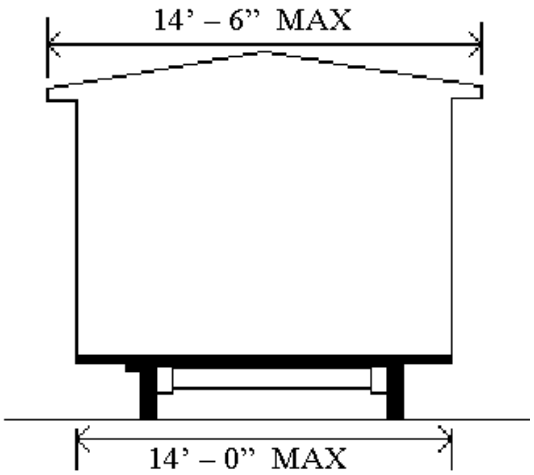

Annotated Copy

~~Single Trip Permits 90,000 Lb. Divisible Load - Interstate Only~~

- ~~**INTRODUCTION:**~~

~~23 VSA §1400 and §1402 empower the Commissioner of Motor Vehicles to issue overweight or over dimension permits for the operation or movement of a vehicle over state highways and certain town highways in excess of the legal limit. The Commissioner may make rules subject to which the vehicle must be operated. The approval may be given for a limited or unlimited length of time and may be withdrawn for cause. In addition, the Commissioner of Motor Vehicles may deny permits for just cause including, but not limited to, providing false information on applications, continued violation of the rules governing overweight/over dimension operation and/or repeated violation of similar laws or regulations.~~

~~The policy of the Department is to give consideration to the safety and convenience of the general public and the protection of the highway systems of this state. The legislature, in setting forth certain statutory limitations, intended to protect the public from hazard and unnecessary inconvenience and to preserve the highways.~~

- ~~**DEFINITION – SINGLE TRIP 90,000 LB DIVISIBLE LOAD INTERSTATE PERMIT:**~~

~~A Single Trip Ninety Thousand (90,000) Pound Divisible Load Interstate Only Permit is the written authorization granted by the Commissioner of Motor Vehicles for the movement of a divisible load on the National System of Interstate and Defense Highways. This permit allows for a one time entrance and one time exit to the National System of Interstate and Defense Highway. The provisions of 23 VSA §1392 (13) regarding vehicle configuration and axle weights shall apply. Reasonable access does not apply to vehicles operated under this permit. That includes provisions of 23 VSA §1433 and DMV Rule 34.~~

- ~~**WHERE TO APPLY:**~~

~~Applications are primarily accepted by fax if an escrow account containing adequate funds is in place, or from a private commercial permit service. When a fee is required, the Commercial Vehicle Operations Unit will accept checks and money orders in US funds only.~~

~~If a private commercial permit service is used, the permit service must have established an escrow account with the Commercial Vehicle Operations Unit. The escrow account must have adequate funds to cover the transaction. These permit services can forward applications by fax. The applicant will pay all state fees and the permit service's processing charges as required. Generally they will accept credit cards as well as other means of payment.~~

~~Applications may be obtained from:~~

~~Commercial Vehicle Operations Unit~~
~~Department of Motor Vehicles~~
~~120 State Street~~
~~Montpelier, VT 05603-0001~~

~~Phone: 802-828-2064~~
~~Fax: 802-828-5418~~
~~DMV Website: dmv.vermont.gov~~

- ~~**FEE:**~~

~~$35.00~~

Annotated Copy

- **~~EXPIRATION:~~**

  ~~Single Trip 90,000 lb. Divisible Load Permits are issued to cover a single trip on the National System of Interstate and Defense Highways within ten (10) working days of issuance. When the trip will exceed the ten (10) working day limit, a new permit will be required. Extensions of time may be granted at the discretion of the Commissioner of Motor Vehicles or his/her authorized representative.~~

- **~~PRIVATE PERMIT SERVICES:~~**

  ~~A single trip oversize permit may be obtained through a commercial vehicle permitting agency. The permitting agency must be in good standings with Commercial Vehicle Operations Unit and have adequate funds in an escrow account maintained in the Commercial Vehicle Operations Unit. Permits will be accepted by fax from the permitting agency, processed and faxed back to the agency. The applicant is required to pay all state fees and permit service processing charges as required. This department will not be held responsible for errors on the permit application submitted by the permit service. Changes and amendments to permits will be subject to additional permit fees.~~

- **~~PERMITS ISSUED TO MOVER:~~**

  ~~Permits will be issued only to the person or firm who will actually be doing the transporting of vehicle and load.~~

- **~~ONLY ONE VEHICLE ON A PERMIT:~~**

  ~~Only one vehicle or combination vehicle will be allowed on each permit.~~

- **~~CARRYING PERMITS:~~**

  ~~The permit, or a legible permit facsimile, must be carried in the vehicle. The permit shall be available for inspection by any enforcement officer or representative of the Department of Motor Vehicles or Agency of Transportation empowered to issue such permit during movement authorized by the permit.~~

- **~~ROUTINGS:~~**

  ~~This permit authorizes travel on the National System of Interstate and Defense Highways only. Other permits will be required for travel on state highways off the Interstate System.~~

- **~~DEPARTMENT JURISDICTION:~~**

  ~~The permit will be effective only insofar as the Department has jurisdiction and authority and it does not release the applicant from complying with other existing laws, local ordinances or conditions which may govern the movement.~~

- **~~COMPLIANCE WITH LAWS:~~**

Annotated Copy

~~The acceptance of a permit by the applicant is his/her agreement that the vehicle or load can and will be moved strictly in compliance with the terms and the conditions set forth in the permit. This includes regulations listed on or accompanying the permit, those regulations in the DMV Administrative Rule and with the condition the operator and vehicles are properly licensed and the applicant has complied with all legal requirements imposed by the Vermont Motor Vehicle laws.~~

- **~~RESPONSIBILITY:~~**

~~The applicant shall assume all responsibility for injury to persons or damage to public or private property caused directly or indirectly by the transportation of vehicle or loads under the permit. Furthermore, the applicant agrees to hold the State of Vermont, Agency of Transportation, and the Department of Motor Vehicles harmless from all suits, claims, damages or proceedings of any kind as a direct or indirect result of the transportation of the vehicle and/or load.~~

- **~~VIOLATION OF PERMIT CONDITIONS:~~**

~~A Single Trip 90,000 Lb. Interstate Only Permit may be voided and confiscated by any law enforcement officer and is automatically invalidated for the trip by the violation of any condition specified in the terms of the permit, these rules and regulations or by false information given on the application.~~

- **~~ADMINISTRATIVE PENALTIES:~~**

~~MULTIPLE CONVICTIONS OF VIOLATIONS~~

~~SINGLE TRIP PERMITS:~~

~~Administrative Penalties for Violations of:~~

~~1. Providing false information on the application.~~

~~2. Operation in violation of the permit.~~

~~3. Continued operation after an order to cease operation(s) has been given.~~

~~These violations may result in the following penalties in addition to any other traffic complaints or citations:~~

- **~~1st Offense:~~**

  ~~1. Officer issues Vermont Civil Violation Complaint.~~

  ~~2. Vehicle may continue after being brought into compliance or new permit issued.~~

- **~~2nd Offense Within 1 Year:~~**

  ~~1. Officer issues Vermont Civil Violation Complaint; permit is voided.~~

  ~~2. Vehicle may continue after being brought into compliance and new permit is issued.~~

Annotated Copy

- ~~**3rd Offense Within 1 Year:**~~

  ~~1. Officer issues Vermont Civil Violation Complaint; permit is voided.~~

  ~~2. Vehicle and load brought into compliance.~~

  ~~3. 24-hour permit issued.~~

  ~~4. No Single Trip Permit issued to cited vehicle for fifteen (15) days.~~

- ~~**4th Offense Within 1 Year:**~~

  ~~1. Officer issues Vermont Civil Violation Complaint; permit is voided.~~

  ~~2. Vehicle and load brought into compliance.~~

  ~~3. 24-hour permit issued.~~

  ~~4. No Single Trip Permit issued to cited vehicle for thirty (30) days.~~

Special Excess Weight Permits

- **INTRODUCTION:**

  23 VSA §1400 and §1402 empower the Commissioner of Motor Vehicles to issue overweight or over dimension permits for the operation or movement of a vehicle or combination vehicle and its nondivisible load within prescribed limits of size and/or weight over state highways and certain town highways in excess of the legal limit. The Commissioner may make regulations subject to which the vehicle must be operated. The approval may be given for a limited or unlimited length of time and may be withdrawn for cause. In addition, the Commissioner of Motor Vehicles may deny permits for just cause including, but not limited to, providing false information on applications, continued violation of the rules governing overweight/over dimension operation and/or repeated violation of similar laws or regulations.

  The policy of the Department is to give consideration to the safety and convenience of the general public and the protection of the highway systems of this state. The legislature, in setting forth certain statutory limitations, intended to protect the public from hazard and unnecessary inconvenience and to preserve the highways.

- **DEFINITION:**

  A Special Excess Weight Permit is the annual written authorization granted by the Commissioner of Motor Vehicles for the movement of a vehicle or combination vehicle and its divisible load up to specific weight limits over state highways. These permits may be further restricted by the vehicle configuration and/or commodity being transported.

- **WHERE TO APPLY:**

Annotated Copy

Applications are primarily accepted through the mail or in person and may be obtained from:

Commercial Vehicle Operations
Department of Motor Vehicles
120 State Street
Montpelier, VT 05603-0001

Phone: 802-828-2064
Fax: 802-828-5418
DMV.CommercialVehicleOSOWPermitting@vermont.gov
dmv.vermont.gov

~~Commercial Vehicle Operations Unit~~
~~Department of Motor Vehicles~~
~~120 State Street~~
~~Montpelier, VT 05603-0001~~

~~Phone: 802-828-2064~~
~~Fax: 802-828-5418~~
~~DMV Website: dmv.vermont.gov~~

- ~~**FEES:**~~

~~IF THE REGISTERED WEIGHT IS:~~	~~EXCESS WEIGHT PERMIT MAY BE ISSUED FOR:~~	~~AUTHORIZED PRODUCTS:~~	~~FULL PERMIT FEE IS*:~~
~~55,000 lbs.~~	~~60,000 lbs.~~	~~All~~	~~$115.00~~
~~60,000 lbs.~~	~~69,000 lbs.~~	~~All~~	~~$260.00~~
~~72,000 lbs.~~	~~–~~	~~All~~	~~$10.00~~
~~76,000 lbs.~~	~~–~~	~~All~~	~~$10.00~~
~~80,000 lbs.~~	~~90,000 lbs.~~	~~All~~	~~$310.00~~
~~80,000 lbs.~~	~~90,000 lbs.~~	~~Milk~~	~~$285.00~~
~~90,000 lbs.~~	~~90,000 lbs.~~	~~Milk~~	~~$7.00~~
~~80,000 lbs.~~	~~99,000 lbs.~~	~~All~~	~~$500.00~~
~~*Fees are subject to change without notice.~~			

- **EXPIRATION:**

Special Excess Weight Permits will expire coincidentally with the vehicle's registration except for vehicles not registered in Vermont, in which case the permit shall expire at midnight December 31st (12/31) following the date of issue.

- **PERMITS ISSUED TO REGISTRANT:**

Permits must be issued in the name of the registrant and match the registration certificate.

- **TRANSFER OF PERMITS:**

Permits may only be transferred in conjunction with the transfer of the truck's registration and plates, for an administrative fee.

- **ONLY ONE VEHICLE ON A PERMIT:**

Annotated Copy

Only one vehicle or combination vehicle will be allowed on each permit. A separate permit shall be issued for each authorized weight and must be carried in the vehicle when operating at such weight.

- **UPGRADE TO HEAVIER WEIGHTS:**

  A truck owner with a permit may upgrade through purchase of additional permits by paying the difference in fees for each permit bought rather than the full fee for each permit. Permits of a lesser weight for the same vehicle or combination of vehicles may be purchased for an administrative fee.

- **VEHICLES REGISTERED IN ANOTHER STATE:**

  To qualify for a Special Excess Weight Permit a vehicle registered in another state must meet all weight and size requirements of this state and be registered or hold a permit in the other state for the permitted weight requested. In addition, overweight permits shall not be issued to vehicles registered in another state and province unless that state or province issues similar permits on a reciprocal basis to vehicles registered in Vermont.

- **ALL PRODUCTS PERMITS:**

  The following conditions apply:

  - **3-Axle Straight Trucks:**

    With a single steering axle and rear tandem axles, both powered and braked, registered to the minimum of fifty-five thousand (55,000) pounds may obtain a permit to gross sixty thousand (60,000) pounds.

  - **4-Axle Straight Trucks:**

    With a single steering axle and rear tri-axle group with two axles of the tri-axle group powered and braked, registered to the minimum of sixty thousand (60,000) pounds may obtain a permit to gross sixty-nine thousand (69,000) pounds.

  - **4-Axle Truck/Tractor Semi-Trailer Combination:**

    With a maximum gross weight of not more than seventy-two thousand (72,000) pounds, provided the distance between the second axle of the tractor and the rear axle of the trailer is at least twenty-four feet (24') measured to the nearest foot. (For each foot or fraction of a foot less than twenty-four feet (24') measured to the nearest foot, a reduction of two thousand [2,000] pounds in the maximum gross weight shall be made.)

  - **5 or more Axle Truck/Tractor Semi-Trailer or Truck Trailer Combination:**

    With a maximum gross weight of not more than seventy-six thousand (76,000) pounds provided that the distance between the first and last axle of two (2) consecutive sets of tandem axles is at least twenty-four feet (24') measured to the nearest foot. (For each foot or fraction of a foot less than twenty-four feet (24') measured to the nearest foot, a reduction of two thousand (2,000) pounds in the maximum gross weight shall be made.)

    - **Ninety Thousand (90,000) Pound Permits:**

Annotated Copy

Must meet the axle and distance provisions of 23 VSA §1392(4).

- **Ninety-Nine Thousand (99,000) Pound Permits:**

  Requires six (6) or more axles, and fifty-one feet (51') between centers of the extreme axles. Must be registered to eighty thousand (80,000) pounds.

- **Unprocessed Milk Products or Water:**

  Means raw milk or water transported in bulk in a tank truck, semi-trailer, trailer or combination thereof. Water may be transported on state highways only.

  - **Ninety Thousand (90,000) Pound Permits:**

    A minimum of fifty-one feet (51') between centers of the first and last axle is required for a five (5) or more axle combination.

- **POSTED ROADS:**

  During winter thaws, rainy periods or when frost begins to melt, the Agency of Transportation may post state highways. Permits **DO NOT** supercede road postings.

- **PERMISSION FROM CITIES/TOWNS:**

  For operation of a vehicle in excess of the statutory weight limits over highways and bridges under the jurisdiction of a municipality, except Class 1 town highways, application will be made to the appropriate legislative body or its representative. A list of any special weight limits which differ from statutory limits is available from the Department of Motor Vehicles along with the name of the person responsible for issuing permits in each municipality.

- **DEPARTMENT JURISDICTION:**

  The permit will be effective only insofar as the Department has jurisdiction and authority and it does not release the applicant from complying with other existing laws, local ordinances or conditions which may govern the movement.

- **RESPONSIBILITY:**

  The applicant shall assume all responsibility for injury to persons or damage to public or private property caused directly or indirectly by the transportation of vehicle or loads under the permit. Furthermore, the applicant agrees to hold the State of Vermont, Agency of Transportation, and the Department of Motor Vehicles harmless from all suits, claims, damages or proceedings of any kind as a direct or indirect result of the transportation of the vehicle and/or load.

- **ADMINISTRATIVE PENALTIES:**

  SPECIAL EXCESS WEIGHT PERMITS:

  Administrative Penalties for Violations of:

Annotated Copy

1. Providing false information on the application.
2. Operation in violation of the permit.
3. Continued operation after an order to cease operation(s) has been given.
4. After lawful order to off load.

These violations may result in the following penalties in addition to any other traffic complaints or citations:

- **1st Offense Other Than Overweight:**
  1. Permit revoked.
  2. All information must be corrected (to include level of registration) before new permit is issued.
- **2nd Offense Other Than Overweight Within 1 Year:**
  1. Permit revoked.
  2. No permit may be issued to the permittee for thirty (30) days.
- **3rd Offense Other Than Overweight Within 1 Year:**
  1. Permit revoked.
  2. No permit may be issued to the permittee for sixty (60) days.
- **4th Offense Other Than Overweight Within 1 Year:**
  1. Permit revoked.
  2. All existing permits issued to the permittee are revoked for fifteen (15) days.

Special Purpose Blanket Permits

- **INTRODUCTION:**

23 VSA §1400 and §1402 empower the Commissioner of Motor Vehicles to issue overweight or over dimension permits for the operation or movement of a vehicle over state highways and certain town highways in excess of the legal limit. The Commissioner may make rules subject to which the vehicle must be operated. The approval may be given for a limited or unlimited length of time and may be withdrawn for cause. In addition, the Commissioner of Motor Vehicles may deny permits for just cause including, but not limited to, providing false information on applications, continued violation of the rules governing overweight/over dimension operation and/or repeated violation of similar laws or regulations.

Annotated Copy

The policy of the Department is to give consideration to the safety and convenience of the general public and the protection of the highway systems of this state. The legislature, in setting forth certain statutory limitations, intended to protect the public from hazard and unnecessary inconvenience and to preserve the highways.

- **DEFINITION:**

A Special Purpose Blanket Permit is the written authorization granted by the Commissioner of Motor Vehicles for the movement of a nondivisible special purpose vehicle such as well drillers and concrete pump trucks with prescribed limits of size and/or weight over State/Interstate highways.

- **WHERE TO APPLY:**

Applications are primarily accepted through the mail or in person and may be obtained from:

Commercial Vehicle Operations
Department of Motor Vehicles
120 State Street
Montpelier, VT 05603-0001

Phone: 802-828-2064
Fax: 802-828-5418
DMV.CommercialVehicleOSOWPermitting@vermont.gov
dmv.vermont.gov

~~Commercial Vehicle Operations Unit~~
~~Department of Motor Vehicles~~
~~120 State Street~~
~~Montpelier, VT 05603-0001~~

~~Phone: 802-828-2064~~
~~Fax: 802-828-5418~~
~~DMV Website: dmv.vermont.gov~~

- ~~**FEES:**~~

~~$100.00 for the first unit, $5.00 for each additional unit up to a maximum of $1,000.00.~~

- **EXPIRATION:**

Special Purpose Blanket permits expire with the vehicles registration.

- **PERMITS ISSUED TO REGISTRANT:**

Permits must be issued in the name of the registrant and match the registration certificate.

- **TRANSFER OF PERMITS:**

Permits may only be transferred in conjunction with the truck registration for an administrative fee.

- **HOURS OF OPERATION:**

Travel with vehicles and/or loads which are over width, or over length or over height shall be restricted to daylight hours and movement shall be made between thirty (30) minutes before sunrise to thirty (30) minutes after sunset. Vehicles which are overweight only, and are capable of traveling with the traffic flow, are not restricted to daylight travel time.

Annotated Copy

On highways where traffic is heavy during certain hours, it may be necessary to further restrict the movement to certain hours of the day or to certain days of the week.

- **HOLIDAY OPERATIONS:**

Loads over ~~ten feet, six inches (10' 6")~~ twelve feet (12'0") wide may not be operated on state highways on any of the following legal holidays as observed in the State of Vermont.

- New Year's Day: January 1st
- ~~Martin Luther King Day: 3rd Monday in January~~
- ~~President's Day: 3rd Monday in February~~
- Memorial Day: Last Monday in May
- Independence Day: July 4th
- Labor Day: 1st Monday in September
- ~~Columbus Day: 2nd Monday in October~~
- ~~Veteran's Day: November 11th~~
- Thanksgiving Day: 4th Thursday in November
- Christmas Day: December 25th

~~If a holiday falls on a Saturday, the preceding Friday is a legal holiday; if a holiday falls on a Sunday, the following Monday is a legal holiday and these days are restricted as other holidays.~~

The Commissioner of Motor Vehicles may further restrict the movement of over-legal size vehicles before and after certain holidays if deemed necessary.

- **INCLEMENT WEATHER:**

For loads 12' wide or greater, and/or 80' long or greater:

No travel is allowed during any ice condition, sleet, freezing rain, slush or combination thereof or any snow accumulation to the extent that it is heavy enough to stick to the highway surface~~.~~; and ~~Also,~~ no travel is allowed ~~during any period of rain or other weather that requires the use of windshield wipers in the "steady" on position by users of the highway, or~~ when visibility is reduced by rain, fog or any other weather condition ~~of the conditions previously listed~~ to the extent that the load is not readily identifiable by users of the highway at a distance of a quarter (¼) mile. At all times roads must be safe and clear enough to allow traffic to pass. ~~Roads must be clear and free of water which causes spray or mist that interferes with the visibility of other vehicles.~~

When such conditions exist during a trip, permitted vehicles must exit the road at the first available safe location where vehicle and load can park without impeding traffic until the weather conditions clear ~~and/or until the road conditions improve~~. A vehicle is not permitted to travel during inclement weather if it is subject to, or was required to have, and engineering review.

- **SPEED:**

The Commissioner may prescribe maximum speeds below legal limits for hazardous loads or conditions. State highways speed is limited to forty-five (45) miles per hour for loads in excess of ninety thousand (90,000) pounds or ten feet (10') in width or thirteen feet, six inches (13' 6") in height or seventy-five feet (75') in length. Interstate highways maximum speed shall be sixty (60) miles per hour unless otherwise specified. Speed may be restricted further on specific roads or portions of roads as required to ensure safe movement of over dimension loads.

Annotated Copy

- **POSTED ROADS:**

  During winter thaws, rainy periods or when frost begins to melt, the Agency of Transportation may post state highways. Permits **DO NOT** supercede road postings.

- **MAXIMUM LIMITS:**

  Blanket permits for statewide operation must conform to the following guidelines:

  1. Maximum Width: Ten feet, six inches (10' 6") when length is greater than ~~sixty-eight feet (68')~~ seventy-five feet (75') up to one hundred feet (100').

  2. Maximum Width: Twelve feet, six inches (12' 6") when length does not exceed ~~sixty-eight feet (68')~~ seventy-five feet (75').

  3. Maximum Height: Fourteen feet (14').

  4. Maximum Weight for Nondivisible Loads Only: One hundred eight thousand (108,000) pounds, depending on the number of axles and axle spacing. Vehicle must be registered to at least eighty thousand (80,000) pounds.

  5. Maximum length for vehicles without a trailer or semi-trailer (single vehicle) may not exceed forty-six feet (46').

  Operation at one hundred feet (100') or more in length, the permit applicant shall file with the Commissioner of Motor Vehicles, a special certificate of insurance showing minimum coverage of $250,000 for death or injury to one person, $500,000 for death or injury to two or more persons and $250,000 for property damage, all arising out of any one accident.

  Blanket permits generally will not be issued for over width, or over length truck – trailer combinations for statewide operation where the vehicle excluding the load is in excess of the legal limit.

- **PERMISSION FROM CITIES/TOWNS:**

  - **OVERWEIGHT:**

    For operation of a vehicle in excess of the statutory weight limits over highways and bridges under the jurisdiction of a municipality, except Class 1 town highways, application will be made to the appropriate legislative body or its representative. A list of any special weight limits which differ from statutory limits is available from the Department of Motor Vehicles along with the name of the person responsible for issuing permits in each municipality.

  - **OVERDIMENSION:**

    For operation, on highways under the jurisdiction of a municipality, of a vehicle and load in excess of the statutory dimensions, but within the dimensions allowed under a "Blanket Permit", permits may be issued by the Department of Motor Vehicles, Commercial Vehicle Operations Unit. For operation of a vehicle and load in excess of the dimensions allowed under a blanket

Annotated Copy

permit, permits are issued by the municipality. Application is made to the appropriate legislative body or their representative.

- **MAXIMUM WEIGHT:**

No vehicle or combination of vehicles shall be operated upon the highways of this state when the gross weight on the road surface through any wheel thereof exceeds six hundred (600) pounds per inch of tire width. (Manufacturer's designation shall be used for computing tire width.) Any permit issued shall not be valid upon the state highways, state aid or town roads or bridges that are posted for a lower road limit than the gross weight of the vehicle and load.

- **MAXIMUM HEIGHT:**

The clearance of facilities and general safety of the traveling public are the governing factors in issuing over height permits. The height of structures shall be checked by the permit applicant to insure that adequate clearance is available for the movement. The height of traffic lights at fourteen feet (14') is a factor in determining the height allowed.

- **Note:** Older traffic signals may be lower due to stretch and sag.

- **USE OF TRAVEL LANES:**

When two or more lanes are available in one direction, vehicles shall travel in the right lane except in an emergency or to comply with any other restrictions established by the state.

- **CONVOY OPERATIONS:**

There shall be a minimum spacing of one thousand feet (1,000') between permitted vehicles when two (2) or more permitted vehicles are traveling together.

- **SLOW MOVING VEHICLES:**

All slow moving vehicles shall keep as close to the right hand side of the highway as is reasonably practicable. A person operating a motor vehicle impeding other traffic on a highway shall pull off the highway at the first safe haven to allow the traffic to pass before proceeding.

- **PARKED OVERSIZE LOADS:**

Any oversize load, when parked at other than its place of origin or destination, shall conspicuously display the name and telephone number of a party that, at all hours can see to its immediate removal or security if needed. These markings shall be easily legible.

- **DEPARTMENT JURISDICTION:**

The permit will be effective only insofar as the Department has jurisdiction and authority and it does not release the applicant from complying with other existing laws, local ordinances or conditions which may govern the movement.

Annotated Copy

- **ADMINISTRATIVE PENALTIES:**

BLANKET PERMITS:

Administrative Penalties for Violations of:

1. Providing false information on application.
2. Operation in violation of permit.
3. Continued operation after an order to cease operation(s) has been given.

These violations may result in the following penalties in addition to any other traffic complaints or citations:

- **1st Offense:**
  1. Officer issues Vermont Civil Violation Complaint.
  2. Vehicle may continue after being brought into compliance or new permit issued.
- **2nd Offense Within 1 Year:**
  1. Officer issues Vermont Civil Violation Complaint; permit is voided.
  2. Vehicle may continue after being brought into compliance and a new permit is issued.
- **3rd Offense Within 1 Year:**
  1. Officer issues Vermont Civil Violation Complaint; permit is voided.
  2. Vehicle and load brought into compliance.
  3. 24-hour permit issued.
  4. No permit issued to cited vehicle for fifteen (15) days.
- **4th Offense Within 1 Year:**
  1. Officer issues Vermont Civil Violation Complaint; permit is voided.
  2. Vehicle and load brought into compliance.
  3. Cited vehicles permit canceled.
  4. 24-hour permit issued.
  5. No Blanket or Single Trip Permit issued to cited vehicle for thirty (30) days.

Annotated Copy

Special Purpose Motor Vehicle in Excess of the Statutory Limits ~ Self-Issue Crane Permits

- **INTRODUCTION:**

The Commissioner of Motor Vehicles hereby adopts a self-issue permit process governing the operation of cranes across structures including bridges and culverts. 23 VSA §1400 and §1402 empower the Commissioner of Motor Vehicles to issue overweight or over dimension permits for the operation or movement of a vehicle over state highways and certain town highways in excess of the legal limit. The Commissioner may make rules subject to which the vehicle must be operated. The approval may be given for a limited or unlimited length of time and may be withdrawn for cause. In addition, the Commissioner of Motor Vehicles may deny permits for just cause including, but not limited to, providing false information on applications, continued violation of the rules governing overweight/over dimension operation and/or repeated violation of similar laws or regulations.

The policy of the Department is to give consideration to the safety and convenience of the general public and the protection of the highway systems of this state. The legislature, in setting forth certain statutory limitations, intended to protect the public from hazard and unnecessary inconvenience and to preserve the highways.

- **PERMIT DIMENSIONS:**

Carriers utilizing the self-issue permit process must fall into one of the established crane categories. Crane categories have been established for two (2), three (3), four (4), and five (5) axle cranes. These categories include structures that require a five (5) mile per hour speed limit when being crossed and also listings of structures that cannot be crossed to include bridges and culverts . The crane categories were developed based on actual measured weights and axle spacings provided by the Department of Motor Vehicles. These lists are dynamic and minor changes are anticipated as bridges are either replaced or re-rated due to a change in condition. It is anticipated, other than an emergency situation (i.e. structure posting/restriction/closing), any updates will be done on an annual basis.

A complete listing of all crane categories including routing and structure restrictions can be obtained by contacting the Commercial Vehicle Permit Unit or accessing the Department's Web Site at: dmv.vermont.gov, select Commercial Trucking – Self Propelled Crane Information. There is also a link that will take you to the Vermont Agency of Transportation mapping system which is a web based, GIS application that allows users to map and display information with restrictions for two (2), three (3), four (4), and five (5) axle crane movements. This will be a beneficial tool when selecting routes for self-propelled cranes over the highways of Vermont. The Department, in conjunction with the Agency of Transportation, has developed a list of approved routes for which permits may be issued. Depending on the destination, there is no guarantee a crane will be eligible for a permit. If the requested route of travel is not an approved route, the Agency of Transportation engineers would have to evaluate the route to assure the road and/or bridges could accommodate the weight of the crane. This evaluation could result in the issuance of a single trip permit.

Annotated Copy

An Administrative decision has been declared that cranes will be considered a nondivisible load, meaning it cannot be broken down and will be allowed to travel with counter weights and boom. Cranes operators are required to get a Single Trip Permit, which will only be issued for approved routes. If traveling on a route that has not been surveyed for a crane, the engineers must review the vehicle dimensions and weight along with the requested routing. A diagram of the crane would have to be submitted along with the axle weights, axle spacing and tire size.

- **DEFINITION:**

The Special Purpose Motor Vehicle in Excess of the Statutory Limits Permit was created to expedite the issuance of crane permits. Vehicles falling into the designated envelopes/categories must adhere to the restrictions outlined for that specific category. The Carrier shall act as an agent of the Department of Motor Vehicles for the purpose of self-issuing a crane Single Trip Permit. Single Trip is defined as a trip in one direction between two designated points.

- **WHERE TO APPLY:**

To establish an escrow account, obtain application forms, permit numbers and make an application, contact:

Commercial Vehicle Operations
Department of Motor Vehicles
120 State Street
Montpelier, VT 05603-0001

Phone: 802-828-2064
Fax: 802-828-5418
DMV.CommercialVehicleOSOWPermitting@vermont.gov
dmv.vermont.gov

~~Commercial Vehicle Operations Unit~~
~~Department of Motor Vehicles~~
~~120 State Street~~
~~Montpelier, VT 05603-0001~~

~~Phone: 802-828-2064~~
~~Fax: 802-828-5418~~
~~DMV Website: dmv.vermont.gov~~

- ~~**FEE:**~~

~~$35.00~~

- **ACCEPTABLE PAYMENT:**

Checks or money orders in US Funds, must be made payable to the Vermont Department of Motor Vehicles.

- **EXPIRATION:**

Single Trip Permits may be issued to cover a single trip within ~~ten (10) working~~ seven (7) business days of issuance. When the trip will exceed the ~~ten (10)~~ seven (7) day limit, a new permit will be required.

- **MEMORANDUM OF UNDERSTANDING (MOU):**

Annotated Copy

Prior to giving an individual or company the authority to Self-Issue Permits, they must enter into an MOU with the Department of Motor Vehicles. The MOU outlines the requirements of the carrier and their responsibilities once they enter into the agreement. The MOU will be accompanied with specific procedures, permit applications and a listing of restrictions for structures in their crane category that must be adhered to when issuing the Self-Issue Permits.

- **AUTHORIZED AGENTS:**

Carrier must provide the Department of Motor Vehicles with a signature card of authorized agents allowed to issue permits. This card must contain the printed name, signature and a 24-hour contact phone number. Additions or deletions to this card must be made immediately. Unauthorized signatures will void the permit.

- **PERMIT APPLICATIONS:**

Requests for permit applications must be made to the Commercial Vehicles Permit Unit. Permit applications are two sided and will not be considered valid unless both sides are carried in the vehicle. Application may be photocopied, however they must be neat and legible when completed and faxed to the Department of Motor Vehicles and the Carrier.

- **PERMIT NUMBERS:**

To satisfy the requirements of the Department of Motor Vehicles rules and applicable statutes, the Carrier must request a series of permit numbers from the Department of Motor Vehicles Commercial Vehicles Permit Unit that is sufficient as to insure an ample and ongoing supply for the carrier. The regular statutory fee for each number issued will be deducted from the Carrier's escrow account. Permit number requests will require a 24-hour advance notice. Self-issuance of these permits will not affect the Carrier's current and ongoing ability to secure individual over length permits from the Department of Motor Vehicles during normal business hours.

- **PERMIT VALIDATION:**

The Authorized Agent will be responsible for ensuring that the permit application, form number TA-VX-01, is **completed in full**, including the issuance of authorized routes only. When the authorized agent has completed the permit application in full, it will be immediately faxed to the Vermont Department of Motor Vehicles. The authorized agent must then print the **Fax Transmission Verification Report** from their fax machine that shall include the date and time of the fax and the fax results, i.e., OK or BUSY. This verification report **must** be kept with the permit application, faxed to the driver before entering or moving within the State of Vermont, and will serve as validation of the permit when accompanied with the 2-part permit form TA-VX-01.

- **CANCELLING PERMITS:**

When the self-issued permit is received in the Department of Motor Vehicles Commercial Vehicle Permit Unit, it will be entered into the Carrier's escrow account along with the information that is contained in the permit. Once the permit is issued and faxed to the Department of Motor Vehicles it is considered valid and cannot be cancelled. The Department of Motor Vehicles is not responsible

Annotated Copy

for the mishandling of the permit by the carrier, nor incorrect information entered onto the permit by the carrier.

- **PERMITS ISSUED TO REGISTRANT:**

  Permits will be issued only to the person or firm who will actually be doing the transporting of vehicle and load.

- **ONLY ONE VEHICLE ON A PERMIT:**

  Only one vehicle or combination vehicle will be allowed on each permit.

- **CARRYING PERMITS:**

  The permit, or a legible permit facsimile, must be carried in the vehicle. The permit shall be available for inspection by any enforcement officer or representative of the Department of Motor Vehicles or Agency of Transportation empowered to issue such permit during movement authorized by the permit.

- **PERMISSION FROM CITIES/TOWNS:**

  - **OVERWEIGHT:**

    For operation of a vehicle in excess of the statutory weight limits over highways and bridges under the jurisdiction of a municipality, except Class 1 town highways, application will be made to the appropriate legislative body or its representative. A list of any special weight limits which differ from statutory limits is available from the Department of Motor Vehicles along with the name of the person responsible for issuing permits in each municipality.

  - **OVERDIMENSION:**

    For operation of over dimensional vehicles, on highways under the jurisdiction of a municipality, a vehicle and load in excess of the statutory dimensions, but within the dimensions allowed under a “Blanket Permit”, permits may be issued. For operation of a vehicle and load in excess of the dimensions allowed under a Blanket Permit, permits are issued by the municipality. Application is made to the appropriate legislative body or their representative.

    Carriers should understand that town permits might be required for the use of town roads. A check with the appropriate town for any local requirements is advisable before utilizing town highways.

- **SIGNS/SIGN REQUIREMENTS:**

  Oversize load sign required:

  - For over eight feet, six inches (8’ 6”) width.
  - For over thirteen feet, six inches (13’ 6”) height.

Annotated Copy

- For over for over seventy five feet (75') in length.
- For over forty-six feet (46') for single vehicles.

This sign shall be at least seven feet (7') long by eighteen inches (18") high with yellow background and black lettering. Letters shall be at least ten inches (10") high with a one and one-quarter inch (1¼") brush stroke. The sign shall be made of durable material that will not be affected by inclement weather and kept in legible condition. It shall read "OVERSIZE LOAD". A similar sign that is allowed in other states will be accepted. **The sign must be securely attached to the front most portion and rear most portion of the load or vehicle. The sign must be covered or removed when not making an oversize move.**

If a load consists of an over length object such as a pole or beam, the sign need not be seven feet (7') long but must be of a sufficient size to clearly display the same size lettering as described above.

- **FLAGS/LIGHTS:**

Flags are required on all oversize loads. The flag must be bright or fluorescent red or orange and have a minimum size of eighteen inches by eighteen inches (18" x 18"). They shall be displayed on all four corners (or as close as practicable) of all loads or vehicles that exceed the legal dimensions. Flags shall be in such condition as to be easily distinguished from a reasonable distance. All warning flags shall be secured by at least one corner or mounted on a staff.

1. Over Width Loads: At least four (4) flags mounted at the corners of the vehicle if the vehicle is oversize and at the corners of the load if the load is oversize. In cases of irregular shaped loads such additional flags as may be necessary to mark the widest extremities of the load.

2. Over length loads or loads with rear or front end overhang in excess of four feet (4') shall display one flag at the end of the overhang if less than two feet (2') wide and two (2) flags if the overhang is two feet (2') wide or more.

3. Commercial motor vehicles, as defined in 49 CFR 390.5, must have lights installed and operable on the projecting loads as required by 49 CFR 393.11 Footnotes 9 & 10.

- **USE OF TRAVEL LANES:**

When two or more lanes are available in one direction, vehicles shall travel in the right lane except in an emergency or to comply with any other restrictions established by the state.

- **CONVOY OPERATIONS:**

There shall be a minimum spacing of one thousand feet (1,000') between permitted vehicles when two (2) or more permitted vehicles are traveling together.

- **SLOW MOVING VEHICLES:**

All slow moving vehicles shall at all times keep as close to the right hand side of the highway as is reasonably practicable. A person operating a motor vehicle impeding other traffic on a highway shall pull off the highway at the first safe haven to allow the traffic to pass before proceeding.

Annotated Copy

- **PARKED OVERSIZE LOADS:**

  Any oversize load, when parked at other than its place of origin or destination, shall conspicuously display the name and telephone number of a party that, at all hours can see to its immediate removal or security if needed. These markings shall be easily legible.

- **DEPARTMENT JURISDICTION:**

  The permit will be effective only insofar as the Department has jurisdiction and authority and it does not release the applicant from complying with other existing laws, local ordinances or conditions which may govern the movement.

- **RESPONSIBILITY:**

  The applicant shall assume all responsibility for injury to persons or damage to public or private property caused directly or indirectly by the transportation of vehicle or loads under the permit. Furthermore, the applicant agrees to hold the State of Vermont, Agency of Transportation, and the Department of Motor Vehicles harmless from all suits, claims, damages or proceedings of any kind as a direct or indirect result of the transportation of the vehicle and/or load.

- **VIOLATION OF PERMIT CONDITIONS:**

  A Self-Issue Crane Single Trip Permit may be voided and confiscated by any law enforcement officer and is automatically invalidated for the trip by the violation of any condition specified in the terms of the permit, these rules and regulations or by false information given on the application.

- **ADMINISTRATIVE PENALTIES:**

  MULTIPLE CONVICTIONS OF VIOLATIONS

  SINGLE TRIP PERMITS:

  Administrative Penalties for Violations of:

  1. Providing false information on the application.
  2. Operation in violation of the permit.
  3. Continued operation after an order to cease operation(s) has been given.

  These violations may result in the following penalties in addition to any other traffic complaints or citations:

  - **1st Offense:**

    1. Officer issues Vermont Civil Violation Complaint.
    2. Vehicle may continue after being brought into compliance or new permit issued.

Annotated Copy

- **2nd Offense Within 1 Year:**

  1. Officer issues Vermont Civil Violation Complaint; permit is voided.
  2. Vehicle may continue after being brought into compliance and new permit is issued.

- **3rd Offense Within 1 Year:**

  1. Officer issues Vermont Civil Violation Complaint; permit is voided.
  2. Vehicle and load brought into compliance.
  3. 24-hour permit issued.
  4. No Single Trip Permit issued to cited vehicle for fifteen (15) days.

- **4th Offense Within 1 Year:**

  1. Officer issues Vermont Civil Violation Complaint; permit is voided.
  2. Vehicle and load brought into compliance.
  3. 24-hour permit issued.
  4. No Single Trip Permit issued to cited vehicle for thirty (30) days.

Superloads/Engineering Inspections

- **INTRODUCTION:**

23 VSA §1400 and §1402 empower the Commissioner of Motor Vehicles to issue overweight or over dimension permits for the operation or movement of a vehicle over state highways and certain town highways in excess of the legal limit. The Commissioner may make rules subject to which the vehicle must be operated. The approval may be given for a limited or unlimited length of time and may be withdrawn for cause. In addition, the Commissioner of Motor Vehicles may deny permits for just cause including, but not limited to, providing false information on applications, continued violation of the rules governing overweight/over dimension operation and/or repeated violation of similar laws or regulations.

The policy of the Department is to give consideration to the safety and convenience of the general public and the protection of the highway systems of this state. The legislature, in setting forth certain statutory limitations, intended to protect the public from hazard and unnecessary inconvenience and to preserve the highways.

- **ENGINEERING INSPECTION REQUIREMENTS FOR STATE/INTERSTATE HIGHWAYS:**

An Engineering Inspection is required when the vehicle and/or load meets or exceeds any one of the following:

Annotated Copy

1. Width: Fifteen feet (15') or more except on town highways.

2. Length: More than one hundred feet (100') except on town highways.

3. Height: More than fourteen feet (14') except on town highways.

4. Weight: One hundred fifty thousand (150,000) pounds or more except on town highways.

- **DEFINITION:**

An Engineering Inspection is an in depth review of the requested route and its structures when the weight and/or size of the vehicle and/or load is considered sufficiently excessive. A fee will be added to the cost of the permit in accordance with 23 VSA §1402. An Engineering Inspection may take up to ten (10) working days to process from the date the completed request is received. The Engineering Inspection will be valid for six (6) months for any part of the approved route for loads of the same or lesser dimensions and weights/weight distribution, subject to a minimal inspection at the time of each permit application.

- **WHERE TO APPLY:**

Applications are primarily accepted through the mail or in person and may be obtained from:

Commercial Vehicle Operations
Department of Motor Vehicles
120 State Street
Montpelier, VT 05603-0001

Phone: 802-828-2064
Fax: 802-828-5418
DMV.CommercialVehicleOSOWPermitting@vermont.gov
dmv.vermont.gov

~~Commercial Vehicle Operations Unit~~
~~Department of Motor Vehicles~~
~~120 State Street~~
~~Montpelier, VT 05603-0001~~

~~Phone: 802-828-2064~~
~~Fax: 802-828-5418~~
~~DMV Website: dmv.vermont.gov~~

- ~~**FEES:**~~

  - ~~$300.00 for Prefabricated Homes.~~

  - ~~For loads less than one hundred fifty thousand (150,000) pounds, an $800.00 engineering inspection fee for inspections that require up to eight hours to conduct. If the inspection requires more than eight hours to conduct, the fee shall be $800.00 plus $60.00 per hour for each additional hour required.~~

  - ~~$2,000.00 engineering inspection fee for loads of one hundred fifty thousand (150,000) – two hundred thousand (200,000) pounds.~~

  - ~~$5,000.00 engineering inspection fee for loads two hundred thousand one (200,001) – two hundred fifty thousand (250,000) pounds.~~

  - ~~$10,000.00 engineering inspection fee for loads two hundred fifty thousand one (250,001) pounds or above.~~

Annotated Copy

~~A $35.00 permit fee will be charged for each permit submitted with the engineering inspection.~~

- **EXPIRATION:**

  Permits issued as a result of an Engineering Inspection will be valid for ~~ten (10) working~~ seven (7) business days from the date of issue. The Engineering Inspection will be valid for six (6) months for any part of the approved route for loads of the same or lesser dimensions and weights/weight distribution, subject to a minimal inspection at the time of each permit application.

- **PERMITS ISSUED TO REGISTRANT:**

  Permits must be issued in the name of the registrant and match the registration certificate.

- **INFORMATION TO BE PROVIDED BY APPLICANT SHALL INCLUDE, BUT NOT BE LIMITED TO:**

  1. Applicant name and address.
  2. Description of the towing vehicle:
     a. Make
     b. Registration number and state.
     c. Registered weight.
     d. Number of axles.
  3. Description of trailer:
     a. Make
     b. Registration number and state.
     c. Number of axles.
     d. Serial number (mobile home only) – last four digits.
  4. Description of load.
  5. Gross weight.
  6. Overall dimensions – width, height, length.
  7. Empty width/length of trailer or truck/tractor/trailer combination if over dimensional. (Vermont statute considers any truck/tractor/trailer combination that exceeds seventy-five feet (75’) in length or trailer that exceeds fifty-three feet (53’) in length or eight feet, six inches (8’ 6”) in width or thirteen feet, six inches (13’6”) in height to be over dimension).

Annotated Copy

8. Origin and destination:

   a. Street/road, town/city, state/province) of the load, **not the point of entry into Vermont**.

   b. The exact mileage from the load's origin to state or interstate highway and from interstate or state highway to exact destination of load.

9. Routes requested:

   a. Exact route numbers, town road numbers/names to include route direction (N, S, E, W).

   b. Map of routing required if city or town roads are used. Map must show distances and specific directions from point of origin to the state highway, from the state highway to the point of destination, or closest reference point.

10. Diagram showing tire size, axle spacing, axle weights and dimensions of truck/tractor/trailer and load.

11. Number of loads to be moved.

12. Letters from all utilities involved if applicable (to be submitted with application).

13. Written approval from select board or other authorized persons when city or town streets or roads are to be used (to be submitted with the application).

14. Special certificate of insurance showing a minimum of $250,000 for death or injury of one person, $500,000 for death or injury to two (2) or more persons and $250,000 property damage, all arising out of any one incident, must be submitted with the application to the Department of Motor Vehicles. The insurance certificate must show: Department of Motor Vehicles, 120 State St., Montpelier, VT, 05603 **as the certificate holder**. The Secretary of Transportation or his/her authorized representative at their discretion, may require additional insurance certificates or bonds, based on the oversize load. A faxed copy of the Certificate of insurance is acceptable.

- **HOURS OF OPERATION:**

Travel with vehicles and/or loads which are over width or over length or over height shall be restricted to daylight hours and movement shall be made between thirty (30) minutes before sunrise to thirty (30) minutes after sunset. Vehicles, which are overweight only and are capable of traveling with the traffic flow, are not restricted to daylight travel time.

On highways where traffic is heavy during certain hours, it may be necessary to further restrict the movement to certain hours of the day or to certain days of the week.

- **SATURDAY, SUNDAY AND HOLIDAY OPERATIONS:**

~~Loads over ten feet, six inches (10' 6") wide or over one hundred feet (100') long or in excess of one hundred eight thousand (108,000) pounds must abide by the holiday restrictions.~~ On state highways unless otherwise stated, permits will **not** be issued for movement of loads in excess of one hundred eight thousand (108,000) pounds, or over ~~ten feet, six inches (10' 6")~~ twelve feet (12'0")

Annotated Copy

wide or over one hundred feet (100') long on any Saturday, Sunday, ~~any Friday afternoon between July 1 and Labor Day,~~ or on the following legal holidays as observed in the State of Vermont:

- New Year's Day: January 1st
- ~~Martin Luther King Day: 3rd Monday in January~~
- ~~President's Day: 3rd Monday in February~~
- Memorial Day: Last Monday in May
- Independence Day: July 4th
- Labor Day: 1st Monday in September
- ~~Columbus Day: 2nd Monday in October~~
- ~~Veteran's Day: November 11th~~
- Thanksgiving Day: 4th Thursday in November
- Christmas Day: December 25th

~~If a holiday falls on a Saturday, the preceding Friday is a legal holiday; if a holiday falls on a Sunday, the following Monday is a legal holiday and these days are restricted as other holidays.~~

The Commissioner of Motor Vehicles may further restrict the movement of over-legal size vehicles before and after certain holidays if deemed necessary.

- **INCLEMENT WEATHER:**

For loads 12' wide or greater, and/or 80' long or greater:

No travel is allowed during any ice condition, sleet, freezing rain, slush or combination thereof or any snow accumulation to the extent that it is heavy enough to stick to the highway surface~~.~~; and ~~Also,~~ no travel is allowed ~~during any period of rain or other weather that requires the use of windshield wipers in the "steady" on position by users of the highway, or~~ when visibility is reduced by rain, fog or any other weather condition ~~of the conditions previously listed~~ to the extent that the load is not readily identifiable by users of the highway at a distance of a quarter (¼) mile. At all times roads must be safe and clear enough to allow traffic to pass. ~~Roads must be clear and free of water which causes spray or mist that interferes with the visibility of other vehicles.~~

When such conditions exist during a trip, permitted vehicles must exit the road at the first available safe location where vehicle and load can park without impeding traffic until the weather conditions clear ~~and/or until the road conditions improve~~. A vehicle is not permitted to travel during inclement weather if it is subject to, or was required to have, and engineering review.

- **SPEED:**

The Commissioner may prescribe maximum speeds below legal limits for hazardous loads or conditions. State highways speed is limited to forty-five (45) miles per hour for loads in excess of ninety thousand (90,000) pounds or ten feet (10') in width or thirteen feet, six inches (13' 6") in height or seventy-five feet (75') in length. Interstate highways maximum speed shall be sixty (60) miles per hour unless otherwise specified. Speed may be restricted further on specific roads or portions of roads as required to ensure safe movement of over dimension loads.

- **POSTED ROADS:**

During winter thaws, rainy periods or when frost begins to melt, the Agency of Transportation may post state highways. Permits **DO NOT** ~~supercede~~ supersede road postings.

Annotated Copy

- **PERMISSION FROM CITIES/TOWNS:**

  - **OVERWEIGHT:**

    For operation of a vehicle in excess of the statutory weight limits over highways and bridges under the jurisdiction of a municipality, except Class 1 town highways, application will be made to the appropriate legislative body or its representative. A list of any special weight limits which differ from statutory limits is available from the Department of Motor Vehicles along with the name of the person responsible for issuing permits in each municipality.

  - **OVERDIMENSION:**

    For operation, on highways under the jurisdiction of a municipality, of a vehicle and load in excess of the statutory dimensions, but within the dimensions allowed under a "Blanket Permit", permits may be issued by the Department of Motor Vehicles, Commercial Vehicle Operations Unit. For operation of a vehicle and load in excess of the dimensions allowed under a blanket permit, permits are issued by the municipality. Application is made to the appropriate legislative body or their representative.

- **USE OF TRAVEL LANES:**

  When two or more lanes are available in one direction, vehicles shall travel in the right lane except in an emergency or to comply with any other restrictions established by the state.

- **CONVOY OPERATIONS:**

  There shall be a minimum spacing of one thousand feet (1,000') between permitted vehicles when two (2) or more permitted vehicles are traveling together.

- **SLOW MOVING VEHICLES:**

  All slow moving vehicles shall at all times keep as close to the right hand side of the highway as is reasonably practicable. A person operating a motor vehicle impeding other traffic on a highway shall pull off the highway at the first safe haven to allow the traffic to pass before proceeding.

- **PARKED OVERSIZE LOADS:**

  Any oversize load, when parked at other than its place of origin or destination, shall conspicuously display the name and telephone number of a party that, at all hours can see to its immediate removal or security if needed. These markings shall be easily legible at all times.

- **DEPARTMENT JURISDICTION:**

  The permit will be effective only insofar as the Department has jurisdiction and authority and it does not release the applicant from complying with other existing laws, local ordinances or conditions which may govern the movement.

- **FLAGS/LIGHTS:**

Annotated Copy

Flags are required on all oversize loads. The flag must be bright or fluorescent red or orange and have a minimum size of eighteen inches by eighteen inches (18” x 18”). They shall be displayed on all four corners (or as close as practicable) of all loads or vehicles that exceed the legal dimensions. Flags shall be in such condition as to be easily distinguished from a reasonable distance. All warning flags shall be secured by at least one corner or mounted on a staff.

1. Over Width Loads: At least four (4) flags mounted at the corners of the vehicle if the vehicle is oversize and at the corners of the load if the load is oversize. In cases of irregular shaped loads such additional flags as may be necessary to mark the widest extremities of the load.

2. Over length loads or loads with rear or front end overhang in excess of four feet (4’) shall display one flag at the end of the overhang if less than two feet (2’) wide and two (2) flags if the overhang is two feet (2’) wide or more.

3. Commercial motor vehicles operating in interstate and intrastate commerce as defined in 49 CFR 390.5; Such vehicles must have lights installed and operable on the projecting loads as required by 49 CFR 393.11 Footnotes 9 & 10.

- **SIGNS/SIGN REQUIREMENTS:**

Oversize load sign required:

- For over eight feet, six inches (8’ 6”) width.
- For over thirteen feet, six inches (13’ 6”) height.
- For over seventy-five feet (75’) length.

This sign shall be at least seven feet (7’) long by eighteen inches (18”) high with yellow background and black lettering. Letters shall be at least ten inches (10”) high with a one and one-quarter inch (1¼”) brush stroke. The sign shall be made of durable material that will not be affected by inclement weather. It shall read "OVERSIZE LOAD". A similar sign that is allowed in other states will be accepted. **The sign must be securely attached to the front most portion and rear most portion of the load or vehicle. The sign must be covered or removed when not making an oversize move.**

If a load consists of an over length object such as a pole or beam, the sign need not be seven feet (7’) long but must be of a sufficient size to clearly display the same size lettering as described above.

- **ESCORT VEHICLE REQUIREMENTS:**

Escort vehicles are required when the vehicle and/or load meet or exceed the following dimensions or at the discretion of the Commissioner of Motor Vehicles or his/her authorized representative:

- Wide load of twelve feet (12’) or greater.
- Long load of eighty feet (80’) or greater.
- Overhang of fifteen feet (15’) or greater.

Annotated Copy

An escort vehicle must be at least the size of a compact car or larger. Escort vehicles must maintain two-way radio contact with the permitted vehicle at all times. The escort vehicle must be equipped with a flashing amber light above the highest point of the vehicle or a combination of lights visible from 360 degrees. An escort vehicle preceding an oversize load shall have a sign on the front reading "OVERSIZE LOAD" and an escort vehicle following shall have a sign on the rear reading "OVERSIZE LOAD". These signs shall have ten inch (10") black letters one and one-quarter inch (1¼") brush stroke on a yellow background and be at least five feet (5') long and twelve inches (12") high. Signs must be maintained in a legible condition.

The signs must be covered or removed when the escort vehicle is not accompanying an oversize load.

The escort vehicle must maintain proper spacing between itself and the oversize load so as to adequately warn approaching vehicles.

When one escort is required, it shall precede a load on undivided highways and follow the load on divided highways. Escort vehicle headlights shall be on low beam during all moves.

The Commissioner of Motor Vehicles or his/her authorized representative may require two or more escort vehicles.

- **POLICE ESCORT:**

At the discretion of the Commissioner of Motor Vehicles or his/her authorized representative one or more police escorts may be required.

The police escort shall be responsible to ensure that the vehicle and load are transported within the permitted restrictions and for the overall safe movement of the load, including the control of oncoming traffic to avoid incidents or accidents. The police escort shall be responsible to orally review the permit restrictions with the oversize load driver(s) and the escort vehicle driver(s) and shall be responsible to ensure that two-way inter-vehicle radio communication is maintained throughout the trip. In the event of an emergency occurring during the move the police escort shall contact the Commercial Vehicle Operations Unit 802-828-2064 or contact the nearest State Police Dispatch.

- **ADMINISTRATIVE PENALTIES:**

MULTIPLE CONVICTIONS OF VIOLATIONS

SINGLE TRIP PERMITS:

Administrative Penalties for Violations of:

1. Providing false information on the application.

2. Operation in violation of the permit.

3. Continued operation after an order to cease operation(s) has been given.

Annotated Copy

These violations may result in the following penalties in addition to any other traffic complaints or citations:

- **1st Offense:**

  1. Officer issues Vermont Civil Violation Complaint.
  2. Vehicle may continue after being brought into compliance or new permit issued.

- **2nd Offense Within 1 Year:**

  1. Officer issues Vermont Civil Violation Complaint; permit is voided.
  2. Vehicle may continue after being brought into compliance and new permit is issued.

- **3rd Offense Within 1 Year:**

  1. Officer issues Vermont Civil Violation Complaint; permit is voided.
  2. Vehicle and load brought into compliance.
  3. 24-hour permit issued.
  4. No Single Trip Permit issued to cited vehicle for fifteen (15) days.

- **4th Offense Within 1 Year:**

  1. Officer issues Vermont Civil Violation Complaint; permit is voided.
  2. Vehicle and load brought into compliance.
  3. 24-hour permit issued.
  4. No Single Trip Permit issued to cited vehicle for thirty (30) days.

Over Length Permit for Operation on Route 4

- **INTRODUCTION:**

23 VSA §1432 empower the Commissioner of Motor Vehicles to issue nondivisible over length permits for the operation of vehicles with or without a trailer or semi-trailer over Route 4 from the New Hampshire state line to the junction of VT Route 100 South. The Commissioner may make regulations subject to which the vehicle must be operated. The approval may be given for a limited or unlimited length of time and may be withdrawn for cause. In addition, the Commissioner of Motor Vehicles may deny permits for just cause including, but not limited to, providing false information on applications, continued violation of the rules governing overweight/over dimension operation and/or repeated violation of similar offenses.

Annotated Copy

The policy of the Department is to give consideration to the safety and convenience of the general public and the protection of the highway systems of this state. The legislature, in setting forth certain statutory limitations, intended to protect the public from hazard and unnecessary inconvenience and to preserve the highways.

- **PERMIT DIMENSIONS:**

Vehicles with a trailer or semi-trailer longer than sixty-eight feet (68') but not longer than seventy-~~two~~ five feet (7~~2~~5') may be operated with a single or multi trip over length permit provided the distance from the kingpin of the semitrailer to the center of the rearmost axle group is not greater than forty-one feet (41'). An "axle group" is defined as two (2) or more axles where the centers of all the axles are spaced at an equal distance. If the overall length of a vehicle with a trailer or semi-trailer is longer than seventy-~~two~~ five feet (7~~2~~5'), a permit may be issued pursuant to 23 VSA §1402. Any trailer that exceeds fifty-three feet (53') is not legal for operation in the State of Vermont and no permit shall be issued.

In no instance will a permit be issued that exceeds any legal dimension for Vermont, except the length and only up to and including seventy-~~two~~ five feet (7~~2~~5'), unless otherwise stated. Gross weight cannot exceed eighty thousand (80,000) pounds, width cannot exceed eight feet, six inches (8' 6") and height cannot exceed thirteen feet, six inches (13' 6"). If any of these dimensions are exceeded, a permit must be obtained through the Permit Unit at DMV.

- **WHERE TO APPLY:**

Applications are primarily accepted through the mail or in person and may be obtained from:

Commercial Vehicle Operations
Department of Motor Vehicles
120 State Street
Montpelier, VT 05603-0001

Phone: 802-828-2064
Fax: 802-828-5418
DMV.CommercialVehicleOSOWPermitting@vermont.gov
dmv.vermont.gov

~~Commercial Vehicle Operations Unit~~
~~Department of Motor Vehicles~~
~~120 State Street~~
~~Montpelier, VT 05603-0001~~

~~Phone: 802-828-2064~~
~~Fax: 802-828-5418~~
~~DMV Website: dmv.vermont.gov~~

- ~~**FEES:**~~

~~No fee is required for this permit.~~

- **PERMIT APPLICATIONS:**

Requests for permit applications must be made to Commercial Vehicles. Application may be photocopied, however they must be neat and legible when completed and faxed to DMV. One validated permit application can be used for an entire fleet of vehicles.

- **EXPIRATION:**

Annotated Copy

The over length permit may be issued for single or multi-trips. ~~A single trip permit expires within ten (10) days of issuance. When the trip will exceed the ten (10) day limit, a new permit will be required. Extensions of time may be granted at the discretion of the Commissioner of Motor Vehicles or his/her authorized representative.~~ All ~~multi trip~~ permits will expire one year from the date of issue.

- **PERMITS ISSUED TO MOVER:**

  Permits will be issued only to the person or firm who will actually be doing the transporting of vehicle and load.

- ~~**ONLY ONE VEHICLE ON A PERMIT:**~~

  ~~Only one vehicle or combination vehicle will be allowed on each permit.~~

- **DEPARTMENT JURISDICTION:**

  The permit will be effective only insofar as the Department has jurisdiction and authority and it does not release the applicant from complying with other existing laws, local ordinances or conditions which may govern the movement.

- **RESPONSIBILITY:**

  The applicant shall assume all responsibility for injury to persons or damage to public or private property caused directly or indirectly by the transportation of vehicle or loads under the permit. Furthermore, the applicant agrees to hold the State of Vermont, Agency of Transportation, and the Department of Motor Vehicles harmless from all suits, claims, damages or proceedings of any kind as a direct or indirect result of the transportation of the vehicle and/or load.

- **CARRYING PERMITS:**

  The permit must be carried in the vehicle. The permit shall be available for inspection by any enforcement officer or representative of the Dept/Agency of Transportation empowered to issue such permit during movement authorized by the permit.

- **USE OF TRAVEL LANES:**

  When two or more lanes are available in one direction, vehicles shall travel in the right lane except in an emergency or to comply with any other restrictions established by the state.

- **CONVOY OPERATIONS:**

  There shall be a minimum spacing of one thousand feet (1,000') between permitted vehicles when two or more permitted vehicles are traveling together.

- **ADMINISTRATIVE PENALTIES:**

  MULTIPLE CONVICTIONS OF VIOLATIONS

  SINGLE TRIP PERMITS:

Annotated Copy

Administrative Penalties for Violations of:

1. Providing false information on the application.
2. Operation in violation of the permit.
3. Continued operation after an order to cease operation(s) has been given.

These violations may result in the following penalties in addition to any other traffic complaints or citations:

- **1st Offense:**
  1. Officer issues Vermont Civil Violation Complaint.
  2. Vehicle may continue after being brought into compliance or new permit issued.
- **2nd Offense Within 1 Year:**
  1. Officer issues Vermont Civil Violation Complaint; permit is voided.
  2. Vehicle may continue after being brought into compliance and new permit is issued.
- **3rd Offense Within 1 Year:**
  1. Officer issues Vermont Civil Violation Complaint; permit is voided.
  2. Vehicle and load brought into compliance.
  3. 24-hour permit issued.
  4. No Single Trip Permit issued to cited vehicle for fifteen (15) days.
- **4th Offense Within 1 Year:**
  1. Officer issues Vermont Civil Violation Complaint; permit is voided.
  2. Vehicle and load brought into compliance.
  3. 24-hour permit issued.
  4. No Single Trip Permit issued to cited vehicle for thirty (30) days.

Annotated Copy

Rules and Instructions Governing Overweight and Overdimension Vehicle Permits

Clean Copy

VERMONT

Agency of Transportation
Department of Motor Vehicles
120 State Street
Montpelier, Vermont 05603

Contents

Blanket Permits 3
Definition – Blanket Permit: 3
Definition – Nondivisible Loads: 3
Emergency Moves 11
Definition: 11
Farm Equipment Dealer Permits 14
Definition: 14
Reasonable Access Permits 17
Reasonable Access Under Federal Law: 17
Reasonable Access Permits: 17
Exceptions: 18
Single Trip Permits 22
Definition – Single Trip Permit: 23
Definition – Nondivisible Loads: 23
Special Oversize Trailers: 23
Special Excess Weight Permits 33
Special Purpose Blanket Permits 37
Special Purpose Motor Vehicle In Excess Of The Statutory Limits ~ Self-Issue Crane Permits 42
Permit Dimensions: 42
Superloads/Engineering Inspections 49
Engineering Inspection Requirements For State/Interstate Highways: 49
Over Length Permit For Operation On Route 4 57

Clean Copy

Blanket Permits

- **INTRODUCTION:**

23 VSA §1400 and §1402 empower the Commissioner of Motor Vehicles to issue overweight or over dimension permits for the operation or movement of a vehicle over state highways and certain town highways in excess of the legal limit. The Commissioner may make regulations subject to which the vehicle must be operated. The approval may be given for a limited or unlimited length of time and may be withdrawn for cause. In addition, the Commissioner of Motor Vehicles may deny permits for just cause including, but not limited to, providing false information on applications, continued violation of the rules governing overweight/over dimension operation and/or repeated violation of similar offenses.

The policy of the Department is to give consideration to the safety and convenience of the general public and the protection of the highway systems of this state. The legislature, in setting forth certain statutory limitations, intended to protect the public from hazard and unnecessary inconvenience and to preserve the highways.

- **DEFINITION – BLANKET PERMIT:**

A Blanket Permit is the written authorization granted by the Commissioner of Motor Vehicles for the movement of a vehicle or combination vehicle and its nondivisible load with prescribed limits of size and/or weight over State/Interstate highways.

- **Note:** Vehicles obtaining blanket permits for weight must be registered to the maximum limit and so configured as to legally meet the road limit in accordance with 23 VSA §1391 & §1392.

- **DEFINITION – NONDIVISIBLE LOADS:**

Blanket Permits are issued for nondivisible loads. For this purpose *nondivisible* means any load or vehicle exceeding applicable dimension or weight limits which, if separated into smaller loads or vehicles, would:

1. Compromise the intended use of the vehicle, i.e., make it unable to perform the function for which it was intended;

2. Destroy the value of the load or vehicle, i.e., make it unusable for its intended purpose; or

3. Require more than eight (8) work hours to dismantle using appropriate equipment. The applicant for a nondivisible load permit has the burden of proof as to the number of work hours required to dismantle the load.

   - **Note:** Nondivisible does not prohibit the movement of more than one piece when the permit is issued for the largest piece and additional pieces do not cause the total load to exceed a dimension already allowed by the permitting of the original piece. For instance, a permit issued for an over width wooden truss would remain valid if a number of trusses were piled

Clean Copy

on but that action did not cause the load to exceed the width of the original truss or cause the load to be overlength, over height, or overweight.

- **WHERE TO APPLY:**

Applications are primarily accepted through the mail or in person and may be obtained from:

Commercial Vehicle Operations
Department of Motor Vehicles
120 State Street
Montpelier, VT 05603-0001

Phone: 802-828-2064
Fax: 802-828-5418
DMV.CommercialVehicleOSOWPermitting@vermont.gov
dmv.vermont.gov

- **EXPIRATION:**

Blanket Permits expire with the vehicles registration.

- **PERMITS ISSUED TO REGISTRANT:**

Permits must be issued in the name of the registrant and match the registration certificate.

- **TRANSFER OF PERMITS:**

Permits may only be transferred in conjunction with the truck registration for an administrative fee.

- **HOURS OF OPERATION:**

Travel with vehicles and/or loads which are over width or overlength or over height shall be restricted to daylight hours and movement shall be made between thirty (30) minutes before sunrise to thirty (30) minutes after sunset. Vehicles, which are overweight only and are capable of traveling with the traffic flow, are not restricted to daylight travel time.

On highways where traffic is heavy during certain hours, it may be necessary to further restrict the movement to certain hours of the day or to certain days of the week.

- **SATURDAY, SUNDAY AND HOLIDAY OPERATIONS:**

On state highways unless otherwise stated, permits will **not** be issued for movement of loads in excess of one hundred eight thousand (108,000) pounds, or over twelve feet (12'0") wide or over one hundred feet (100') long on any Saturday, Sunday, or on the following legal holidays as observed in the State of Vermont:

- New Year's Day: January 1st
- Memorial Day: Last Monday in May
- Independence Day: July 4th
- Labor Day: 1st Monday in September
- Thanksgiving Day: 4th Thursday in November
- Christmas Day: December 25th

The Commissioner of Motor Vehicles may restrict the movement of oversize and overweight vehicles before and after certain holidays if deemed necessary.

Clean Copy

- **INCLEMENT WEATHER:**

For loads 12' wide or greater, and/or 80' long or greater:

No travel is allowed during any ice condition, sleet, freezing rain, slush or combination thereof or any snow accumulation to the extent it is heavy enough to stick to the highway surface; and when visibility is reduced by rain, fog or any other weather condition to the extent the load is not readily identifiable by users of the highway at a distance of a quarter (¼) mile. At all times roads must be safe and clear enough to allow traffic to pass.

When such conditions exist during a trip, permitted vehicles must exit the road at the first available safe location where vehicle and load can park without impeding traffic until the weather conditions clear. A vehicle is not permitted to travel during inclement weather if it is subject to, or was required to have, and engineering review.

- **SPEED:**

The Commissioner may prescribe maximum speeds below legal limits for hazardous loads or conditions. State highways speed is limited to forty-five (45) miles per hour for loads in excess of ninety thousand (90,000) pounds or ten feet (10') in width or thirteen feet, six inches (13' 6") in height or seventy-five feet (75') in length. Interstate highways maximum speed shall be sixty (60) miles per hour unless otherwise specified. Speed may be restricted further on specific roads or portions of roads as required to ensure safe movement of over dimension loads.

- **POSTED ROADS:**

During winter thaws, rainy periods or when frost begins to melt, the Agency of Transportation may post state highways. Permits **DO NOT** supersede road postings.

- **MAXIMUM LIMITS:**

Blanket permits for statewide operation must conform to the following guidelines:

1. Maximum Width: Ten feet, six inches (10' 6") when length is greater than seventy-five feet (75') up to one hundred feet (100').
2. Maximum Width: Twelve feet, six inches (12' 6") when length does not exceed seventy-five feet (75').
3. Maximum Height: Fourteen feet (14').
4. Maximum Weight for Nondivisible Loads Only:
   - One hundred eight thousand (108,000) pounds, depending on the number of axles and axle spacing.
   - Twelve thousand (12,000) pounds allowed on the steering axle, twenty thousand (20,000) pounds on all other axles:
     - Five (5) axle combination vehicle = ninety-two thousand (92,000) pounds,

Clean Copy

- Six (6) or more axle combination vehicle = one hundred eight thousand (108,000) pounds.

Vehicle must be registered to the maximum allowed for the vehicle's configuration.

5. Maximum length for vehicles without a trailer or semi-trailer (single vehicle): Forty-six feet (46').

Operation at one hundred feet (100') or more in length, the permit applicant shall file with the Commissioner of Motor Vehicles, a special certificate of insurance showing minimum coverage of $250,000 for death or injury to one person, $500,000 for death or injury to two or more persons and $250,000 for property damage, all arising out of any one accident.

Blanket permits will not be issued for over width, over length, or over height truck or truck – trailer combinations for statewide operation where the vehicle, excluding the load, is in excess of the legal limit subject to the Special Oversize Trailers exception set forth below. Blanket permits may be issued for over width or over length statewide operations where the vehicle is the commodity being transported.

- **SPECIAL OVERSIZE TRAILERS – DEFINITION; BLANKET PERMITS AVAILABLE UNDER LIMITED CIRCUMSTANCES:**

Special Oversize Trailers or semi-trailers that are over legal length or width. The length or width in excess of legal dimensions is required to move certain oversize loads.

Single Trip Permits are required and are the only permits available for special oversize trailers with two (2) exceptions for which Blanket Permits may be issued.

1. Trailers actually registered on September 1, 1994 and subsequently renewed only by that registrant.

   If ownership of the trailer is transferred, it no longer falls under the so-called "grandfather" clause. Single Trip Permits would be issued for the delivery of oversize loads that require an oversize trailer and for the dispatch and return of the trailer. Single Trip Permits would also be issued for the movement of empty trailers for repairs or for some similar purposes.

2. The second exception is for trailers or semi-trailers designed and used to transport highway building equipment and road making appliances.

- **SPECIAL LOW BED TRAILER:**

Annual permits may be issued for "low bed" trailers at the fee established by 23 VSA §1402(e). Low bed trailers are manufactured for the primary purpose of carrying heavy equipment on a flat-surfaced deck, which deck is at a height equal to or lower than the top of the rear axle group provided the total vehicle length does not exceed seventy-five feet (75'), a loaded width of twelve feet, six inches (12' 6") and total weight of one hundred eight thousand (108,000) pounds and has a height not exceeding fourteen feet (14'). Signs and flags are required if the vehicle exceeds seventy-five feet (75') in length or eight feet, six inches (8' 6") in width.

Clean Copy

- **PERMISSION FROM CITIES/TOWNS:**

  - **OVERWEIGHT:**

    For operation of a vehicle in excess of the statutory weight limits over highways and bridges under the jurisdiction of a municipality, except Class 1 town highways, application will be made to the appropriate legislative body or its representative. A list of any special weight limits which differ from statutory limits is available from the Department of Motor Vehicles along with the name of the person responsible for issuing permits in each municipality.

  - **OVERDIMENSION:**

    For operation, on highways under the jurisdiction of a municipality, of a vehicle and load in excess of the statutory dimensions, but within the dimensions allowed under a "Blanket Permit", permits may be issued by the Department of Motor Vehicles, Commercial Vehicle Operations Unit. For operation of a vehicle and load in excess of the dimensions allowed under a blanket permit, permits are issued by the municipality. Application is made to the appropriate legislative body or their representative.

- **MAXIMUM WEIGHT:**

  No vehicle or combination of vehicles shall be operated upon the highways of this state when the gross weight on the road surface through any wheel thereof exceeds six hundred (600) pounds per inch of tire width. (Manufacturer's designation shall be used for computing tire width.) Any permit issued shall not be valid upon the state highways, state aid or town roads or bridges that are posted for a lower road limit than the gross weight of the vehicle and load.

- **MAXIMUM HEIGHT:**

  The clearance of facilities and general safety of the traveling public are the governing factors in issuing over height permits. The height of structures shall be checked by the permit applicant to insure adequate clearance is available for the movement. The height of traffic lights at fourteen feet (14') is a factor in determining the height allowed.

  - **Note:** Older traffic signals may be lower due to stretch and sag.

- **FLAGGERS:**

  Flaggers, wearing reflective traffic vests, may be required for over dimension or overweight loads. The purpose of the flagger is to protect traffic when entering or leaving main highways and to assist the driver at locations where visibility is reduced or obscured.

- **FLAGS/LIGHTS:**

  Flags are required on all oversize loads. The flag must be bright or fluorescent red or orange and have a minimum size of eighteen inches by eighteen inches (18" x 18"). They shall be displayed on all four corners (or as close as practicable) of all loads or vehicles that exceed the legal dimensions.

Clean Copy

Flags shall be in such condition as to be easily distinguished from a reasonable distance. All warning flags shall be secured by at least one corner or mounted on a staff.

1. Over Width Loads: At least four (4) flags mounted at the corners of the vehicle if the vehicle is oversize and at the corners of the load if the load is oversize. In cases of irregular shaped loads such additional flags as may be necessary to mark the widest extremities of the load.

2. Over length loads or loads with rear or front end overhang in excess of four feet (4') shall display one flag at the end of the overhang if less than two feet (2') wide and two (2) flags if the overhang is two feet (2') wide or more.

3. Commercial motor vehicles as defined in 49 CFR 390.5; Such vehicles must have lights installed and operable on the projecting loads as required by 49 CFR 393.11 Footnotes 9 & 10.

- **USE OF TRAVEL LANES:**

When two or more lanes are available in one direction, vehicles shall travel in the right lane except in an emergency or to comply with any other restrictions established by the state.

- **SLOW MOVING VEHICLES:**

All slow moving vehicles shall keep as close to the right hand side of the highway as practicable. A person operating a motor vehicle impeding other traffic on a highway shall pull off the highway at the first location where vehicle and load can park without impeding traffic to allow the traffic to pass before proceeding.

- **PARKED OVERSIZE LOADS:**

Any oversize load, when parked at other than its place of origin or destination, shall conspicuously display the name and telephone number of a party that, at all hours can see to its immediate removal or security if needed. These markings shall be easily legible.

- **SIGNS/SIGN REQUIREMENTS:**

Oversize load sign required:

- For over eight feet, six inches (8' 6") width.
- For over thirteen feet, six inches (13' 6") height.
- For over seventy-five feet (75') in length.

This sign shall be at least seven feet (7') long by eighteen inches (18") high with yellow background and black lettering. Letters shall be at least ten inches (10") high with a one and one-quarter inch (1¼") brush stroke. The sign shall be made of durable material that will not be affected by inclement weather and be kept in legible condition. It shall read "OVERSIZE LOAD". A similar sign that is allowed in other states will be accepted. **The sign must be securely attached to the front most portion and rear most portion of the load or vehicle. The sign must be covered or removed when not making an oversize move.**

Clean Copy

If a load consists of an over length object such as a pole or beam, the sign need not be seven feet (7') long but must be of a sufficient size to clearly display the same size lettering as described above.

- **ESCORT VEHICLE REQUIREMENTS:**

Escort vehicles are required when the vehicle and/or load meet or exceed the following dimensions or at the discretion of the Commissioner of Motor Vehicles or his/her authorized representative:

- Wide load of twelve feet (12') or greater.
- Long load of eighty feet (80') or greater.
- Overhang of fifteen feet (15') or greater.

An escort vehicle must be at least the size of a compact car or larger. Escort vehicles must maintain two-way radio contact with the permitted vehicle at all times. The escort vehicle must be equipped with a flashing amber light above the highest point of the vehicle or a combination of lights visible from 360 degrees. An escort vehicle preceding an oversize load shall have a sign on the front reading "OVERSIZE LOAD" and an escort vehicle following shall have a sign on the rear reading "OVERSIZE LOAD". These signs shall have ten inch (10") black letters one and one-quarter inch (1¼") brush stroke on a yellow background at least five feet (5') long and twelve inches high (12"). Signs must be maintained in a legible condition.

The signs must be covered or removed when the escort vehicle is not accompanying an oversize load.

The escort vehicle must maintain proper spacing between itself and the oversize load so as to adequately warn approaching vehicles.

When one escort is required, it shall precede a load on undivided highways and follow the load on divided highways. Escort vehicle headlights shall be on low beam during all moves.

The Commissioner of Motor Vehicles or his/her authorized representative may require two or more escort vehicles.

- **CONVOY OPERATIONS:**

There shall be a minimum spacing of one thousand feet (1,000') between permitted vehicles when two (2) or more permitted vehicles are traveling together.

- **ADMINISTRATIVE PENALTIES:**

BLANKET PERMITS:

Administrative Penalties for Violations of:

1. Providing false information on application.

Clean Copy

2. Operation in violation of permit.

3. Continued operation after an order to cease operation(s) has been given.

These violations may result in the following penalties in addition to any other traffic complaints or citations:

- **1st Offense:**

  1. Officer issues Vermont Civil Violation Complaint.

  2. Vehicle may continue after being brought into compliance or new permit issued.

- **2nd Offense Within 1 Year:**

  1. Officer issues Vermont Civil Violation Complaint; permit is voided.

  2. Vehicle may continue after being brought into compliance and a new permit is issued.

- **3rd Offense Within 1 Year:**

  1. Officer issues Vermont Civil Violation Complaint; permit is voided.

  2. Vehicle and load brought into compliance.

  3. 24-hour permit issued.

  4. No permit issued to cited vehicle for fifteen (15) days.

- **4th Offense Within 1 Year:**

  1. Officer issues Vermont Civil Violation Complaint; permit is voided.

  2. Vehicle and load brought into compliance.

  3. Cited vehicle's permit canceled.

  4. 24-hour permit issued.

  5. No Blanket or Single Trip Permit issued to cited vehicle for thirty (30) days.

Clean Copy

Emergency Moves

- **INTRODUCTION:**

23 VSA §1400 and §1402 empower the Commissioner of Motor Vehicles to issue overweight or over dimension permits for the operation or movement of a vehicle over state highways and certain town highways in excess of the legal limit. The Commissioner may make rules subject to which the vehicle must be operated. The approval may be given for a limited or unlimited length of time and may be withdrawn for cause. In addition, the Commissioner of Motor Vehicles may deny permits for just cause including, but not limited to, providing false information on applications, continued violation of the rules governing overweight/over dimension operation and/or repeated violation of similar laws or regulations.

The policy of the Department is to give consideration to the safety and convenience of the general public and the protection of the highway systems of this state. The legislature, in setting forth certain statutory limitations, intended to protect the public from hazard and unnecessary inconvenience and to preserve the highways.

- **DEFINITION:**

For the purpose of these permits, an emergency is defined as follows:

> "*A calamity, existing or imminent, which requires immediate remedial action to protect life, property and the environment*". The fact a contractor or mover is being delayed in the execution of a job or contract or has a crew waiting for a piece of equipment is not sufficient justification for an emergency permit.

The request must be based upon such an emergency condition. If it is necessary to make an emergency move at a time the Department of Motor Vehicles is closed, the applicant must contact the Department of Public Safety, Central Communications Center, 802-244-8727, Waterbury, Vermont and give a brief description of the emergency. The Department of Public Safety will contact the authorized official for the Department of Motor Vehicles and provide information on the nature of the emergency.

- **PROCEDURE:**

The following procedure must be followed and the permit number issued prior to the move.

a. The person requesting the permit must provide the following information:

   1. Reason for the emergency move request.

   2. Complete name of mover.

   3. Description of load.

   4. Overall dimensions and weight of vehicle and load.

Clean Copy

5. Description of towing vehicle and trailer.

6. Total number of axles.

7. Axle spacing.

8. Tire sizes (weight in excess of eighty thousand [80,000] pounds).

9. Exact location of load.

10. Exact destination.

11. All routes requested.

12. Any additional information requested by the authorized Department of Motor Vehicles official.

b. The Department of Motor Vehicles authorized official will contact the Agency of Transportation for restrictions on bridges and road conditions when appropriate.

Authorized Official: Vermont Agency of Transportation

c. Based on the information provided, the authorized Department of Motor Vehicle official will determine any special restrictions to be attached to the permit.

1. The mover will be issued a special number preceded by the initials of the authorizing official.

2. The mover may be assessed a fee.

3. The authorized official will be responsible for notifying pertinent state and local law enforcement of the conditions of the move.

Authorized Official: Vermont Department of Motor Vehicles Commissioner or his/her designee

- **ADMINISTRATIVE PENALTIES:**

MULTIPLE CONVICTIONS OF VIOLATIONS

SINGLE TRIP PERMITS:

Administrative Penalties for Violations of:

1. Providing false information on the application.

2. Operation in violation of the permit.

3. Continued operation after an order to cease operation(s) has been given.

These violations may result in the following penalties in addition to any other traffic complaints or citations:

Clean Copy

- **1st Offense:**
  1. Officer issues Vermont Civil Violation Complaint.
  2. Vehicle may continue after being brought into compliance or new permit issued.
- **2nd Offense Within 1 Year:**
  1. Officer issues Vermont Civil Violation Complaint; permit is voided.
  2. Vehicle may continue after being brought into compliance and new permit is issued.
- **3rd Offense Within 1 Year:**
  1. Officer issues Vermont Civil Violation Complaint; permit is voided.
  2. Vehicle and load brought into compliance.
  3. 24-hour permit issued.
  4. No Single Trip Permit issued to cited vehicle for fifteen (15) days.
- **4th Offense Within 1 Year:**
  1. Officer issues Vermont Civil Violation Complaint; permit is voided.
  2. Vehicle and load brought into compliance.
  3. 24-hour permit issued.
  4. No Single Trip Permit issued to cited vehicle for thirty (30) days.

Clean Copy

Farm Equipment Dealer Permits

- **INTRODUCTION:**

23 VSA §1400 and §1402 empower the Commissioner of Motor Vehicles to issue overweight or over dimension permits for the operation or movement of a vehicle over state highways and certain town highways in excess of the legal limit. The Commissioner may make rules subject to which the vehicle must be operated. The approval may be given for a limited or unlimited length of time and may be withdrawn for cause. In addition, the Commissioner of Motor Vehicles may deny permits for just cause including, but not limited to, providing false information on applications, continued violation of the rules governing overweight/over dimension operation and/or repeated violation of similar laws or regulations.

The policy of the Department is to give consideration to the safety and convenience of the general public and the protection of the highway systems of this state. The legislature, in setting forth certain statutory limitations, intended to protect the public from hazard and unnecessary inconvenience and to preserve the highways.

- **DEFINITION:**

The Commissioner of Motor Vehicles, or his/her representative, upon application, may issue annually to dealers in farm tractors or other farm implements, over width permits to transport or draw upon a highway such farm implements as are incidental to the conduct of such business.

- **WHERE TO APPLY:**

Applications are primarily accepted through the mail or in person and may be obtained from:

Commercial Vehicle Operations
Department of Motor Vehicles
120 State Street
Montpelier, VT 05603-0001

Phone: 802-828-2064
Fax: 802-828-5418
DMV.CommercialVehicleOSOWPermitting@vermont.gov
dmv.vermont.gov

- **EXPIRATION:**

Farm Dealer Permits expire with the vehicles registration.

- **REGISTRATION:**

When operation occurs using “Farm Dealer” plates permits are only valid for uses permitted under 23 VSA §454, Dealer’s use of motor vehicles.

- **HOURS OF OPERATION:**

Operation will be during the time from sunrise to sunset. No vehicles, implements or combination thereof shall be operated on any highway on a legal holiday, except on trips not in excess of two (2)

Clean Copy

miles, nor upon any highway at any time on which operation is prohibited by order of the Commissioner or his/her representative.

- **MAXIMUM WIDTH**:

Thirteen feet (13') – Farm Equipment Dealers ONLY

- **FLAG REQUIREMENTS:**

From sunrise to sunset, at least two (2) bright or fluorescent red or orange flags not smaller than eighteen inches (18") square must be displayed on the left front and rear of the vehicle or implement or combination during the period thereof in such a manner as to be clearly visible from the front and rear for a distance of at least five hundred feet (500'). If equipment is manufactured with lights and brakes both must be in working order, other equipment must display a safety triangle on the rear.

- **DEPARTMENT JURISDICTION:**

The permit will be effective only insofar as the Department has jurisdiction and authority and it does not release the applicant from complying with other existing laws, local ordinances or conditions which may govern the movement.

- **ADMINISTRATIVE PENALTIES:**

BLANKET PERMITS:

Administrative Penalties for Violations of:

1. Providing false information on application.
2. Operation in violation of permit.
3. Continued operation after an order to cease operation(s) has been given.

These violations may result in the following penalties in addition to any other traffic complaints or citations:

- **1st Offense:**
  1. Officer issues Vermont Civil Violation Complaint.
  2. Vehicle may continue after being brought into compliance or new permit issued.
- **2nd Offense Within 1 Year:**
  1. Officer issues Vermont Civil Violation Complaint; permit is voided.
  2. Vehicle may continue after being brought into compliance and a new permit is issued.

Clean Copy

- **3rd Offense Within 1 Year:**

  1. Officer issues Vermont Civil Violation Complaint; permit is voided.
  2. Vehicle and load brought into compliance.
  3. 24-hour permit issued.
  4. No permit issued to cited vehicle for fifteen (15) days.

- **4th Offense Within 1 Year:**

  1. Officer issues Vermont Civil Violation Complaint; permit is voided.
  2. Vehicle and load brought into compliance.
  3. Cited vehicles permit canceled.
  4. 24-hour permit issued.
  5. No Blanket or Single Trip Permit issued to cited vehicle for thirty (30) days.

Clean Copy

REASONABLE ACCESS PERMITS

- **INTRODUCTION:**

23 VSA §1400 and §1402 empower the Commissioner of Motor Vehicles to issue overweight or over dimension permits for the operation or movement of a vehicle over state highways and certain town highways in excess of the legal limit. The Commissioner may make rules subject to which the vehicle must be operated. The approval may be given for a limited or unlimited length of time and may be withdrawn for cause. In addition, the Commissioner of Motor Vehicles may deny permits for just cause including, but not limited to, providing false information on applications, continued violation of the rules governing overweight/over dimension operation and/or repeated violation of similar laws or regulations.

The policy of the Department is to give consideration to the safety and convenience of the general public and the protection of the highway systems of this state. The legislature, in setting forth certain statutory limitations, intended to protect the public from hazard and unnecessary inconvenience and to preserve the highways.

- **PERMITS REQUIRED:**

REASONABLE ACCESS UNDER FEDERAL LAW:

Federal law requires that reasonable access be granted to vehicles with dimensions authorized by the Surface Transportation Assistance Act of 1982 to operate between the National Network (which includes the Interstate System highways as well as qualifying Federal-aid Primary System highways as designated by the Secretary of the United States Department of Transportation and the Secretary of the Vermont Agency of Transportation) and terminals and facilities for food, fuel, repairs, and rest. Federal law also requires reasonable access between the National Network and points of loading and unloading for household goods carriers, motor carriers of passengers, and commercial motor vehicle combinations consisting of a truck tractor with two trailing units that meet certain criteria.

REASONABLE ACCESS PERMITS:

A reasonable access permit is a written authorization of the Commissioner of Motor Vehicles when a truck tractor, semi-trailer, or trailer combination as set forth below exits the National Network in Vermont identified in 23 CFR Part 658, Appendix A, as authorized under federal reasonable access rules.

Reasonable access permits are required:

(1) For truck tractor - semi-trailer - trailer combinations. Neither a trailer nor a semi-trailer in these combinations may exceed twenty-eight feet (28').

(2) To authorize access to RT4 from the New Hampshire line to the junction of RT100 south for certain automobile transportation vehicles (stinger steer) up to seventy-five feet (75') in length, and for household goods haulers up to seventy-two feet (72') in length.

Clean Copy

The National Network in Vermont, as contained in 23 CFR Part 658, Appendix A, is as follows:

- The entire Interstate System: I-89, I-91, I-93 and I-189
- US 4 from the New York State Line to Rutland City's eastern Boundary
- US 7 from the end of the 4-lane divided highway in Wallingford to US 4 North Intersection in Rutland
- VT 9 from 1-91 intersection 3 North of Brattleboro to the New Hampshire State Line

EXCEPTIONS:

A permit shall not be required in order to operate a vehicle described in the "Reasonable Access Permits" section of these rules as follows:

- On public highways within a one-quarter mile radius of Exit Number 21 on 1-89 in Swanton.
- From Exit Number 8 on I-91 in Brattleboro, northerly on US Route 5 to its intersection with Ferry Road and then easterly on Ferry Road to the entrance to C&S Wholesale Grocers, Inc.
- From Exit Number 3 on I-91 in Brattleboro, easterly on VT Route 9 to the New Hampshire State Line.
- From the terminus of the four-lane divided highway in Wallingford northerly on US Route 7 to US Route 4 in Rutland.
- From the New York State Line easterly on US Route 4 to the Eastern city limit of the City of Rutland.
- On public highways within a one mile radius of the following exits on the Interstate Highway System.

Interstate 91						
County	Location	mi	km	Exit	Destinations	Notes
		0.000	0.000		Massachusetts–Vermont state line	
Windham	Brattleboro	7.480	12.038	1	5 142 US 5 to VT 142 – Brattleboro, Guilford	Also serves Vernon and Hinsdale, NH
		11.550	18.588	3	5 9 US 5 / VT 9 east – Brattleboro, Keene, NH	Also serves World Learning SIT Graduate Institute
	Rockingham	35.200	56.649	6	5 103 US 5 / VT 103 – Rockingham, Rutland, Bellows Falls	Also serves Chester and Ludlow
Windsor	Springfield	41.690	67.094	7	5 11 US 5 / VT 11 – Springfield	Also serves Charlestown, NH and the Fort at Number 4
	Hartford	70.200	112.976	11	5 US 5 – White River Junction	
	Fairlee	91.540	147.319	15	5 US 5 – Fairlee, Orford, NH	Also serves Lake Morey and Lake Fairlee

Clean Copy

Interstate 91

County	Location	mi	km	Exit	Destinations	Notes
	Bradford	97.630	157.120	16	VT 25 to US 5 – Bradford, Barre	Also serves Newbury and Piermont
	Town of Newbury	110.340	177.575	17	US 302 to US 5 – Wells River, Woodsville, NH	Also serves South Ryegate and Groton
	St. Johnsbury	128.890	207.428	20	US 5 – St. Johnsbury, Passumpsic	
	Lyndon	137.110	220.657	23	US 5 to VT 114 – Lyndonville, East Burke	Also serves Lyndon State College
	Barton–Orleans–Irasburg	161.410	259.764	26	US 5 / VT 58 – Orleans, Irasburg	Also serves Lake Willoughby and Jay
	Derby	172.400	277.451	28	US 5 / VT 105 – Newport, Derby Center	Also serves Seymour Lake and Lake Memphremagog
	Derby Line	177.432	285.549	—	A-55 north – Stanstead	Continuation into Quebec

Interstate 89

County	Location	mi	km	Exit	Destinations	Notes
Connecticut River		0.000	0.000		Vietnam Veterans Memorial Bridge	
Windsor	Quechee	3.930	6.325	1	US 4 – Woodstock, Rutland, Quechee	Also serves Killington
	Sharon	13.420	21.597	2	VT 132 to VT 14 – Sharon, South Royalton	
Orange	Randolph	30.900	49.729	4	VT 66 to VT 12 – Randolph	
Washington	Middlesex	58.720	94.501	9	US 2 to VT 100B – Middlesex, Moretown	Also serves Waitsfield, Warren, and Mad River Byway
	Waterbury	63.760	102.612	10	VT 100 to US 2 – Waterbury, Stowe	Also serves Bolton, Waitsfield, and Warren
Chittenden	Richmond	78.410	126.189	11	US 2 to VT 117 – Richmond, Williston, Bolton	
	Williston	83.960	135.121	12	VT 2A to US 2 / VT 116 – Williston, Essex Junction	Also serves Hinesburg and Bristol
	Colchester	91.490	147.239	16	US 2 / US 7 to VT 15 – Winooski, Colchester	Also serves Malletts Bay, Albany College of Pharmacy and Health Sciences, and Essex Junction
		97.870	157.506	17	US 2 / US 7 – Lake Champlain Islands, Milton, Colchester	Also serves New York State via ferry or bridge
Franklin	Georgia	106.550	171.476	18	US 7 / VT 104A – Georgia Center, Fairfax, Milton	
	Town of St. Albans	113.750	183.063	19	US 7 / VT 36 / VT 104 – St. Albans	Also serves VT 105 to Enosburg and Richford
		117.630	189.307	20	US 7 / VT 207 – St. Albans	
	Highgate	130.254	209.623	–	Route 133 north to A-35 – Bedford, Montreal	Continuation into Quebec, Canada; future connection with A-35

Clean Copy

- **WHERE TO APPLY:**

  Applications are primarily accepted through the mail or in person and may be obtained from:

  Commercial Vehicle Operations
  Department of Motor Vehicles
  120 State Street
  Montpelier, VT 05603-0001

  Phone: 802-828-2064
  Fax: 802-828-5418
  DMV.CommercialVehicleOSOWPermitting@vermont.gov
  dmv.vermont.gov

- **EXPIRATION:**

  Reasonable Access Permits expire annually on March 31st.

- **PERMITS ISSUED TO MOVER:**

  Permits will be issued only to the person or firm who will actually be doing the transporting of vehicle and load.

- **CARRYING PERMITS:**

  The permit, or a legible permit facsimile, must be carried in the vehicle. The permit shall be available for inspection by any enforcement officer or representative of the Department of Motor Vehicles or Agency of Transportation empowered to issue such permit during movement authorized by the permit.

- **DEPARTMENT JURISDICTION:**

  The permit will be effective only insofar as the Department has jurisdiction and authority and it does not release the applicant from complying with other existing laws, local ordinances or conditions which may govern the movement.

- **COMPLIANCE WITH LAWS:**

  The acceptance of a permit by the applicant is his/her agreement that the vehicle or object can and will be moved strictly in compliance with the terms and the conditions set forth in the permit. This includes regulations listed on or accompanying the permit, the DMV Rule and with the conditions that the operator and vehicles are properly licensed and the applicant has complied with all legal requirements imposed by the Vermont Motor Vehicle laws.

- **RESPONSIBILITY:**

  The applicant shall assume all responsibility for injury to persons or damage to public or private property caused directly or indirectly by the transportation of vehicle or loads under the permit. Furthermore, the applicant agrees to hold the State of Vermont, Agency of Transportation, and the Department of Motor Vehicles harmless from all suits, claims, damages or proceedings of any kind as a direct or indirect result of the transportation of the vehicle and/or load.

Clean Copy

- **VIOLATION OF PERMIT CONDITIONS:**

  A Reasonable Access Permit, may be voided and confiscated by any law enforcement officer and is automatically invalidated for the trip by the violation of any condition specified in the terms of the permit, these rules and regulations or by false information given on the application.

Clean Copy

Single Trip Permits

- **INTRODUCTION:**

23 VSA §1400 and §1402 empower the Commissioner of Motor Vehicles to issue overweight or over dimension permits for the operation or movement of a vehicle over state highways and certain town highways in excess of the legal limit. The Commissioner may make rules subject to which the vehicle must be operated. The approval may be given for a limited or unlimited length of time and may be withdrawn for cause. In addition, the Commissioner of Motor Vehicles may deny permits for just cause including, but not limited to, providing false information on applications, continued violation of the rules governing overweight/over dimension operation and/or repeated violation of similar laws or regulations.

The policy of the Department is to give consideration to the safety and convenience of the general public and the protection of the highway systems of this state. The legislature, in setting forth certain statutory limitations, intended to protect the public from hazard and unnecessary inconvenience and to preserve the highways.

- **PERMITS REQUIRED:**

Permits are required when the following dimensions or weights specified by Vermont statutes are exceeded.

Width		Height
8’ 6” – All Highways		13’ 6” – All Highways
Length		
Single Vehicles	46’	All Highways
Combination Vehicles	75’	All Highways
Combination Vehicles	68’ – 72’	RT 4 from the New Hampshire line to the Junction of RT 100S

- **Note:** There is no overall length limit for combination vehicles on the National Network (primarily interstate highways); however there are limits on semi-trailer and trailer lengths. A semi-trailer in a truck tractor semi-trailer combination may not exceed fifty-three feet (53’) and no trailer or semi-trailer in a truck tractor semi-trailer trailer combination may exceed twenty-eight feet (28’).

Weight
State Highways and Class 1 Town Highways: Permits are issued by the state. Permits are required when weights exceed statutory limits provided by 23 VSA Chapter 13, Subchapter 15.
Class 2, 3 and 4 Plus Other Posted Town Highways: Permits are issued by the municipality. Permits are required when weights exceed statutory limits provided by 23 VSA Chapter 13, Subchapter 15.

Clean Copy

- **PERMITS FOR WEIGHT:**

When considering permits for weight up to one hundred fifty thousand (150,000) pounds the Department may consider the application within the Department if there are sufficient axles on the vehicle to distribute the weight at the rate of twenty thousand (20,000) pounds per axle with dual wheels and twelve thousand (12,000) pounds per axle with single wheels, commonly steering axles. If the weight exceeds a total that can be covered by this formula it will be denied. Further consideration may require additional information or an engineering review.

- **DEFINITION – SINGLE TRIP PERMIT:**

A Single Trip Permit is the written or oral authorization granted by the Commissioner of the Department of Motor Vehicles for the movement of a nondivisible load between specified points over a predetermined route prescribed by the Commissioner or his/her authorized representative.

- **DEFINITION – NONDIVISIBLE LOADS:**

Single trip permits are issued for nondivisible loads. For this purpose "*nondivisible*" means any load or vehicle exceeding applicable dimension or weight limits which, if separated into smaller loads or vehicles, would:

1. Compromise the intended use of the vehicle, i.e., make it unable to perform the function for which it was intended;

2. Destroy the value of the load or vehicle, i.e., make it unusable for its intended purpose; or

3. Require more than eight (8) work hours to dismantle using appropriate equipment. The applicant for a nondivisible load permit has the burden of proof as to the number of work hours required to dismantle the load.

    - **Note:** Nondivisible does not prohibit the movement of more than one piece when the permit is issued for the largest piece and additional pieces do not cause the total load to exceed a dimension already allowed by the permitting of the original piece. For instance a permit issued for an over width wooden truss would remain valid if a number of trusses were piled on but that action did not cause the load to exceed the width of the original truss or cause the load to be overlength, over height, or overweight.

- **SPECIAL OVERSIZE TRAILERS – DEFINITION; SINGLE TRIP PERMITS AVAILABLE UNDER LIMITED CIRCUMSTANCES:**

Special Oversize Trailers or semi-trailers that are over legal length or width. The length or width in excess of legal dimensions is required to move certain oversize loads.

Single Trip Permits are required and are the only permits available for special oversize trailers with two (2) exceptions for which Blanket Permits may be issued.

1. Trailers actually registered on September 1, 1994 and subsequently renewed only by that registrant.

Clean Copy

If ownership of the trailer is transferred, it no longer falls under the so-called "grandfather" clause. Single Trip Permits would be issued for the delivery of oversize loads that require an oversize trailer and for the dispatch and return of the trailer. Single Trip Permits would also be issued for the movement of empty trailers for repairs or for some similar purposes.

2. The second exception is for trailers or semi-trailers designed and used to transport highway building equipment and road making appliances.

- **WHERE TO APPLY:**

Applications are primarily accepted by fax if an escrow account containing adequate funds is in place, or from a private commercial permit service. Permits may also be obtained through the mail. When a fee is required, the Commercial Vehicle Operations Unit will accept checks and money orders in US funds only. In certain unusual circumstances it may be possible for an escrow account holder to obtain a permit by phone.

If a private commercial permit service is used, the permit service must have established an escrow account with the Commercial Vehicle Operations Unit. The escrow account must have adequate funds to cover the transaction. These permit services can forward applications by fax or phone. The applicant will pay all state fees and the permit service's processing charges as required. Generally they will accept credit cards as well as other means of payment.

Applications may be obtained from:

Commercial Vehicle Operations	Phone: 802-828-2064
Department of Motor Vehicles	Fax: 802-828-5418
120 State Street	DMV.CommercialVehicleOSOWPermitting@vermont.gov
Montpelier, VT 05603-0001	dmv.vermont.gov

- **EXPIRATION:**

Single Trip Permits may be issued to cover a single trip within seven (7) business days of issuance. When the trip will exceed the seven (7) business day limit, a new permit will be required. Extensions of time may be granted at the discretion of the Commissioner of Motor Vehicles or his/her authorized representative.

- **SPECIAL SIZE RESTRICTIONS:**

  - **Length:** The maximum overhang shall not exceed one-third of the length of the load. No over length load shall be permitted to drag upon the roadway.

  - **Width (Eaves Overhang):** For modular and mobile homes, an additional six inches (6") of overhang for eaves only will be allowed. See Figure 1.

- **PERMITS ISSUED TO MOVER:**

Permits will be issued only to the person or firm who will actually be doing the transporting of vehicle and load.

Clean Copy

- **PERMIT ISSUANCE:**

  Permits shall be issued to a truck and shall cover any properly registered trailer which has the required number of axles and proper axle spacing to legally meet the road limit in accordance with 23 VSA 1392 (4).

- **REGISTRATION:**

  Vehicles with special purpose plates such as dealer's plates or contractor's road building registrations or agricultural registration operating under a permit are covered by only such use as is allowed by law. An out-of-state registration does not allow a vehicle to transport property between points in the State of Vermont unless properly registered under the International Registration Plan (IRP), if applicable. An IFTA (International Fuel Tax Agreement) decal may also be required.

- **TOWING VEHICLE (SIZE & LIGHTS):**

  All over legal size mobile homes or modular units shall be towed by a minimum size vehicle with a GVWR of not less than twenty-four thousand (24,000) pounds with dual wheels. In addition to the aforementioned, all moves of over dimension loads shall require a flashing amber light above the highest point of the towing vehicle.

- **ONLY ONE VEHICLE ON A PERMIT:**

  Only one vehicle or combination vehicle will be allowed on each permit.

- **SATURDAY, SUNDAY AND HOLIDAY OPERATIONS:**

  On state highways unless otherwise stated, permits will not be issued for movement of loads in excess of one hundred eight thousand (108,000) pounds, or over twelve feet (12'0") wide or over one hundred feet (100') long on any Saturday, Sunday, or on the following legal holidays as observed in the State of Vermont:

  - New Year's Day: January 1st
  - Memorial Day: Last Monday in May
  - Independence Day: July 4th
  - Labor Day: 1st Monday in September
  - Thanksgiving Day: 4th Thursday in November
  - Christmas Day: December 25th

  The Commissioner of Motor Vehicles may further restrict the movement of over-legal size vehicles before and after certain holidays if deemed necessary.

- **HOURS OF OPERATION:**

  Unless specifically stated on the permit, travel with vehicles and/or loads which are over width, over length or over height shall be restricted to daylight hours and movement shall be made between thirty (30) minutes before sunrise and thirty (30) minutes after sunset. Vehicles, which are overweight only and are capable of traveling with the traffic flow, are not restricted to daylight travel time.

Clean Copy

On highways where traffic is heavy during certain hours, it may be necessary to further restrict the movement to certain hours of the day or to certain days of the week.

- **INCLEMENT WEATHER:**

- For loads 12' wide or greater, and/or 80' long or greater:

  No travel is allowed during any ice condition, sleet, freezing rain, slush or combination thereof or any snow accumulation to the extent that it is heavy enough to stick to the highway surface; and no travel is allowed when visibility is reduced by rain, fog or any other weather condition to the extent that the load is not readily identifiable by users of the highway at a distance of a quarter (¼) mile. At all times roads must be safe and clear enough to allow traffic to pass.

  When such conditions exist during a trip, permitted vehicles must exit the road at the first available safe location where vehicle and load can park without impeding traffic until the weather conditions clear. A vehicle is not permitted to travel during inclement weather if it is subject to, or was required to have, an engineering review.

- **SPEED:**

  The Commissioner may prescribe maximum speeds below legal limits for hazardous loads or conditions. State highways speed is limited to forty-five (45) miles per hour for loads in excess of ninety thousand (90,000) pounds or ten feet (10') in width or thirteen feet, six inches (13' 6") in height or seventy-five feet (75') in length. Interstate highways maximum speed shall be sixty (60) miles per hour unless otherwise specified. Speed may be restricted further on specific roads or portions of roads as required to ensure safe movement of over dimension loads.

- **POSTED ROADS:**

  During winter thaws, rainy periods or when frost begins to melt, the Agency of Transportation may post state highways; permits **DO NOT** supersede road postings.

- **CONVOY OPERATION:**

  There shall be a minimum spacing of one thousand feet (1,000') between permitted vehicles when two or more permitted vehicles are traveling together.

- **PERMISSION FROM CITIES/TOWNS:**

  - **OVERWEIGHT:**

    For operation of a vehicle in excess of the statutory weight limits over highways and bridges under the jurisdiction of a municipality, except Class 1 town highways, application will be made to the appropriate legislative body or its representative. A list of any special weight limits which differ from statutory limits is available from the Department of Motor Vehicles along with the name of the person responsible for issuing permits in each municipality.

Clean Copy

- **OVERDIMENSION:**

  For operation, on highways under the jurisdiction of a municipality, of a vehicle and load in excess of the statutory dimensions, but within the dimensions allowed under a "Blanket Permit", permits may be issued by the Department of Motor Vehicles, Commercial Vehicle Operations Unit. For operation of a vehicle and load in excess of the dimensions allowed under a blanket permit (see note), permits are issued by the municipality. Application is made to the appropriate legislative body or their representative.

  - **Note: Blanket Permit Dimensions:**

    1. Maximum Width: Ten feet, six inches (10' 6") when the length is greater than seventy-five feet (75') up to one hundred feet (100').
    2. Maximum Width: Twelve feet, six inches (12' 6") when the length does not exceed seventy-five feet (75').
    3. Maximum Height: Fourteen feet (14').
    4. Maximum Length: Vehicles without a trailer or semi-trailer (single vehicle) is forty-six feet (46').

- **ROUTINGS:**

  All loads shall be routed over the widest roads available and great care shall be exercised in selecting the proper route of travel. Each permit shall designate the routes or areas to be traveled and may contain special restrictions.

- **DIRECT ROUTING:**

  The Department, in considering whether to issue or deny a permit, shall consider among other issues the most "direct route" reasonably available for the move both through and outside Vermont. In determining the most "direct route", the safety issues affected by the load, vehicle, roadway, traffic, time of day and volume of moves as well as the straightest line between point of origin and destination shall be considered.

  Direct routing is defined as the safest most geometrically suitable road network, which is closest to a straight line, projected between the point of origin and the final destination of the load.

  Vermont **MAY** consider allowing a load through Vermont, not on direct routing, **ONLY** if another state or states along the direct route have denied the request for a permit due to inadequate routes to accommodate the load.

  In such instance, a letter from the denying state or states specifying the reasons for the denial and signed by an authorized state official shall be submitted to the Vermont Department of Motor Vehicles Commercial Vehicle Operations Unit along with the application for an oversize permit.

  - **Note: A higher engineering fee or permit fee in a state on the direct route is not sufficient reason for requesting routing through Vermont and such request will be automatically denied.**

Clean Copy

The Commissioner of Motor Vehicles or his/her representative retains the right to restrict or deny movement over certain routes.

- **SIGNS/SIGN REQUIREMENTS:**

Oversize load sign required:

- For over eight feet, six inches (8’ 6”) width.
- For over thirteen feet, six inches (13’ 6”) height.
- For over seventy-five feet (75’) in length.

This sign shall be at least seven feet (7’) long by eighteen inches (18”) high with yellow background and black lettering. Letters shall be at least ten inches (10”) high with a one and one-quarter inch (1¼”) brush stroke. The sign shall be made of durable material that will not be affected by inclement weather and be kept in legible condition. It shall read "OVERSIZE LOAD". A similar sign that is allowed in other states will be accepted. **The sign must be securely attached to the front most portion and rear most portion of the load or vehicle. The sign must be covered or removed when not making an oversize move.**

If a load consists of an over length object such as a pole or beam, the sign need not be seven feet (7’) long but must be of a sufficient size to clearly display the same size lettering as described above.

- **ESCORT VEHICLE REQUIREMENTS:**

Escort vehicles are required when the vehicle and/or load meet or exceed the following dimensions or at the discretion of the Commissioner of Motor Vehicles or his/her authorized representative:

- Wide load of twelve feet (12’) or greater.
- Long load of eighty feet (80’) or greater.
- Overhang of fifteen feet (15’) or greater.

An escort vehicle must be at least the size of a compact car or larger. Escort vehicles must maintain two-way radio contact with the permitted vehicle at all times. The escort vehicle must be equipped with a flashing amber light above the highest point of the vehicle or a combination of lights visible from 360 degrees. An escort vehicle preceding an oversize load shall have a sign on the front reading “OVERSIZE LOAD” and an escort vehicle following shall have a sign on the rear reading “OVERSIZE LOAD”. These signs shall have ten inch (10”) black letters one and one-quarter inch (1¼”) brush stroke on a yellow background and be at least five feet (5’) long and twelve inches (12”) high. Signs must be maintained in a legible condition.

The signs must be covered or removed when the escort vehicle is not accompanying an oversize load.

Clean Copy

The escort vehicle must maintain proper spacing between itself and the oversize load so as to adequately warn approaching vehicles.

When one escort is required, it shall precede a load on undivided highways and follow the load on divided highways. Escort vehicle headlights shall be on low beam during all moves.

The Commissioner of Motor Vehicles or his/her authorized representative may require two or more escort vehicles.

- **POLICE ESCORT:**

At the discretion of the Commissioner of Motor Vehicles or his/her authorized representative one or more police escorts may be required.

The police escort shall be responsible to ensure the vehicle and load are transported within the permitted restrictions and for the overall safe movement of the load, including the control of oncoming traffic to avoid incidents or accidents. The police escort shall be responsible to orally review the permit restrictions with the oversize load driver(s) and the escort vehicle driver(s) and shall be responsible to ensure two-way inter-vehicle radio communication is maintained throughout the trip. In the event of an emergency occurring during the move the police escort shall contact the Commercial Vehicle Operations Unit at 802-828-2064 or contact the nearest State Police Dispatch.

- **FLAGGERS:**

Flaggers, wearing reflective traffic vests, may be required for over dimension or overweight loads. The purpose of the flagger is to protect traffic when entering or leaving main highways and to assist the driver at locations where visibility is reduced or obscured.

- **FLAGS/LIGHTS:**

Flags are required on all oversize loads. The flag must be bright or fluorescent red or orange and have a minimum size of eighteen inches by eighteen inches (18” x 18”). They shall be displayed on all four corners (or as close as practicable) of all loads or vehicles that exceed the legal dimensions. Flags shall be in such condition as to be easily distinguished from a reasonable distance. All warning flags shall be secured by at least one corner or mounted on a staff.

1. Over Width Loads: At least four (4) flags mounted at the corners of the vehicle if the vehicle is oversize and at the corners of the load if the load is oversize. In cases of irregular shaped loads such additional flags as may be necessary to mark the widest extremities of the load.

2. Over length loads or loads with rear or front end overhang in excess of four feet (4’) shall display one flag at the end of the overhang if less than two feet (2’) wide and two (2) flags if the overhang is two feet (2’) wide or more.

3. Commercial motor vehicles defined in 49 CFR 390.5; Such vehicles must have lights installed and operable on the projecting loads as required by 49 CFR 393.11 Footnotes 9 & 10.

Clean Copy

- **USE OF TRAVEL LANES:**

  When two or more lanes are available in one direction, vehicles shall travel in the right lane except in an emergency or to comply with any other restrictions established by the state.

- **SLOW MOVING VEHICLES:**

  All slow moving vehicles shall keep as close to the right hand side of the highway as practicable. A person operating a motor vehicle impeding other traffic on a highway shall pull off the highway at the first safe haven to allow the traffic to pass before proceeding.

- **PARKED OVERSIZE LOADS:**

  Any oversize load, when parked at other than its place of origin or destination, shall conspicuously display the name and telephone number of a party that, at all hours can see to its immediate removal or security if needed. These markings shall be easily legible.

- **DEPARTMENT JURISDICTION:**

  The permit will be effective only insofar as the Department has jurisdiction and authority and does not release the applicant from complying with other existing laws, local ordinances or conditions which may govern the movement.

- **COMPLIANCE WITH LAWS:**

  The acceptance of a permit by the applicant is his/her agreement that the vehicle or object can and will be moved strictly in compliance with the terms and the conditions set forth in the permit. This includes regulations listed on or accompanying the permit, the DMV Rule and with the conditions that the operator and vehicles are properly licensed and the applicant has complied with all legal requirements imposed by the Vermont Motor Vehicle laws.

- **RESPONSIBILITY:**

  The applicant shall assume all responsibility for injury to persons or damage to public or private property caused directly or indirectly by the transportation of vehicle or loads under the permit. Furthermore, the applicant agrees to hold the State of Vermont, Agency of Transportation, and the Department of Motor Vehicles harmless from all suits, claims, damages or proceedings of any kind as a direct or indirect result of the transportation of the vehicle and/or load.

- **VIOLATION OF PERMIT CONDITIONS:**

  A Single Trip Permit may be voided and confiscated by any law enforcement officer and is automatically invalidated for the trip by the violation of any condition specified in the terms of the permit, these rules and regulations or by false information given on the application.

Clean Copy

- **<u>ADMINISTRATIVE PENALTIES:</u>**

MULTIPLE CONVICTIONS OF VIOLATIONS

SINGLE TRIP PERMITS:

Administrative Penalties for Violations of:

1. Providing false information on the application.
2. Operation in violation of the permit.
3. Continued operation after an order to cease operation(s) has been given.

These violations may result in the following penalties in addition to any other traffic complaints or citations:

- **1st Offense:**
  1. Officer issues Vermont Civil Violation Complaint.
  2. Vehicle may continue after being brought into compliance or new permit issued.
- **2nd Offense Within 1 Year:**
  1. Officer issues Vermont Civil Violation Complaint; permit is voided.
  2. Vehicle may continue after being brought into compliance and new permit is issued.
- **3rd Offense Within 1 Year:**
  1. Officer issues Vermont Civil Violation Complaint; permit is voided.
  2. Vehicle and load brought into compliance.
  3. 24-hour permit issued.
  4. No Single Trip Permit issued to cited vehicle for fifteen (15) days.
- **4th Offense Within 1 Year:**
  1. Officer issues Vermont Civil Violation Complaint; permit is voided.
  2. Vehicle and load brought into compliance.
  3. 24-hour permit issued.
  4. No Single Trip Permit issued to cited vehicle for thirty (30) days.

Clean Copy

FIGURE 1 – MAXIMUM SIZE LIMITS	
Length: 90' – 0" or less Height: 13' – 6" or less Width: 14' – 0" or less 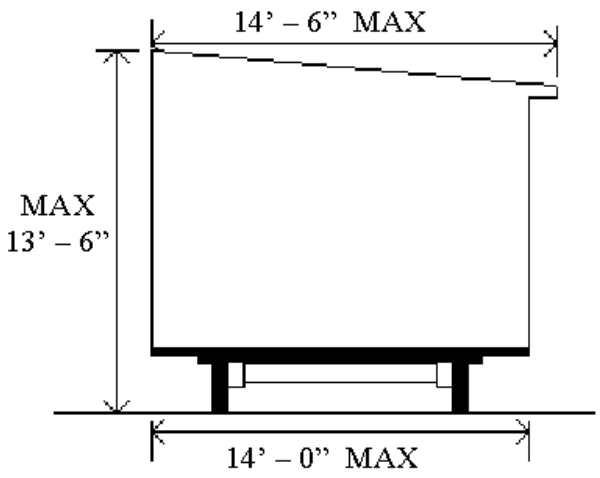	For **Modular** and **Mobile homes** an additional 6" of overhang for eaves only will be allowed providing the greater overhang is on the right-hand shoulder side of the highway. 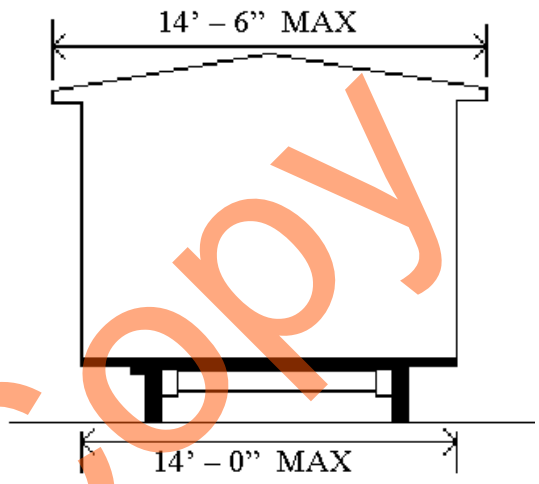

Clean Copy

Special Excess Weight Permits

- **INTRODUCTION:**

23 VSA §1400 and §1402 empower the Commissioner of Motor Vehicles to issue overweight or over dimension permits for the operation or movement of a vehicle or combination vehicle and its nondivisible load within prescribed limits of size and/or weight over state highways and certain town highways in excess of the legal limit. The Commissioner may make regulations subject to which the vehicle must be operated. The approval may be given for a limited or unlimited length of time and may be withdrawn for cause. In addition, the Commissioner of Motor Vehicles may deny permits for just cause including, but not limited to, providing false information on applications, continued violation of the rules governing overweight/over dimension operation and/or repeated violation of similar laws or regulations.

The policy of the Department is to give consideration to the safety and convenience of the general public and the protection of the highway systems of this state. The legislature, in setting forth certain statutory limitations, intended to protect the public from hazard and unnecessary inconvenience and to preserve the highways.

- **DEFINITION:**

A Special Excess Weight Permit is the annual written authorization granted by the Commissioner of Motor Vehicles for the movement of a vehicle or combination vehicle and its divisible load up to specific weight limits over state highways. These permits may be further restricted by the vehicle configuration and/or commodity being transported.

- **WHERE TO APPLY:**

Applications are primarily accepted through the mail or in person and may be obtained from:

Commercial Vehicle Operations
Department of Motor Vehicles
120 State Street
Montpelier, VT 05603-0001

Phone: 802-828-2064
Fax: 802-828-5418
DMV.CommercialVehicleOSOWPermitting@vermont.gov
dmv.vermont.gov

- **EXPIRATION:**

Special Excess Weight Permits will expire coincidentally with the vehicle's registration except for vehicles not registered in Vermont, in which case the permit shall expire at midnight December 31st (12/31) following the date of issue.

- **PERMITS ISSUED TO REGISTRANT:**

Permits must be issued in the name of the registrant and match the registration certificate.

- **TRANSFER OF PERMITS:**

Clean Copy

Permits may only be transferred in conjunction with the transfer of the truck's registration and plates, for an administrative fee.

- **ONLY ONE VEHICLE ON A PERMIT:**

  Only one vehicle or combination vehicle will be allowed on each permit. A separate permit shall be issued for each authorized weight and must be carried in the vehicle when operating at such weight.

- **UPGRADE TO HEAVIER WEIGHTS:**

  A truck owner with a permit may upgrade through purchase of additional permits by paying the difference in fees for each permit bought rather than the full fee for each permit. Permits of a lesser weight for the same vehicle or combination of vehicles may be purchased for an administrative fee.

- **VEHICLES REGISTERED IN ANOTHER STATE:**

  To qualify for a Special Excess Weight Permit a vehicle registered in another state must meet all weight and size requirements of this state and be registered or hold a permit in the other state for the permitted weight requested. In addition, overweight permits shall not be issued to vehicles registered in another state and province unless that state or province issues similar permits on a reciprocal basis to vehicles registered in Vermont.

- **ALL PRODUCTS PERMITS:**

  The following conditions apply:

  - **3-Axle Straight Trucks:**

    With a single steering axle and rear tandem axles, both powered and braked, registered to the minimum of fifty-five thousand (55,000) pounds may obtain a permit to gross sixty thousand (60,000) pounds.

  - **4-Axle Straight Trucks:**

    With a single steering axle and rear tri-axle group with two axles of the tri-axle group powered and braked, registered to the minimum of sixty thousand (60,000) pounds may obtain a permit to gross sixty-nine thousand (69,000) pounds.

  - **4-Axle Truck/Tractor Semi-Trailer Combination:**

    With a maximum gross weight of not more than seventy-two thousand (72,000) pounds, provided the distance between the second axle of the tractor and the rear axle of the trailer is at least twenty-four feet (24') measured to the nearest foot. (For each foot or fraction of a foot less than twenty-four feet (24') measured to the nearest foot, a reduction of two thousand [2,000] pounds in the maximum gross weight shall be made.)

Clean Copy

- **5 or more Axle Truck/Tractor Semi-Trailer or Truck Trailer Combination:**

  With a maximum gross weight of not more than seventy-six thousand (76,000) pounds provided that the distance between the first and last axle of two (2) consecutive sets of tandem axles is at least twenty-four feet (24') measured to the nearest foot. (For each foot or fraction of a foot less than twenty-four feet (24') measured to the nearest foot, a reduction of two thousand (2,000) pounds in the maximum gross weight shall be made.)

  - **Ninety Thousand (90,000) Pound Permits:**

    Must meet the axle and distance provisions of 23 VSA §1392(4).

  - **Ninety-Nine Thousand (99,000) Pound Permits:**

    Requires six (6) or more axles, and fifty-one feet (51') between centers of the extreme axles. Must be registered to eighty thousand (80,000) pounds.

- **Unprocessed Milk Products or Water:**

  Means raw milk or water transported in bulk in a tank truck, semi-trailer, trailer or combination thereof. Water may be transported on state highways only.

  - **Ninety Thousand (90,000) Pound Permits:**

    A minimum of fifty-one feet (51') between centers of the first and last axle is required for a five (5) or more axle combination.

- **POSTED ROADS:**

  During winter thaws, rainy periods or when frost begins to melt, the Agency of Transportation may post state highways. Permits **DO NOT** supercede road postings.

- **PERMISSION FROM CITIES/TOWNS:**

  For operation of a vehicle in excess of the statutory weight limits over highways and bridges under the jurisdiction of a municipality, except Class 1 town highways, application will be made to the appropriate legislative body or its representative. A list of any special weight limits which differ from statutory limits is available from the Department of Motor Vehicles along with the name of the person responsible for issuing permits in each municipality.

- **DEPARTMENT JURISDICTION:**

  The permit will be effective only insofar as the Department has jurisdiction and authority and it does not release the applicant from complying with other existing laws, local ordinances or conditions which may govern the movement.

- **RESPONSIBILITY:**

Clean Copy

The applicant shall assume all responsibility for injury to persons or damage to public or private property caused directly or indirectly by the transportation of vehicle or loads under the permit. Furthermore, the applicant agrees to hold the State of Vermont, Agency of Transportation, and the Department of Motor Vehicles harmless from all suits, claims, damages or proceedings of any kind as a direct or indirect result of the transportation of the vehicle and/or load.

- **ADMINISTRATIVE PENALTIES:**

SPECIAL EXCESS WEIGHT PERMITS:

Administrative Penalties for Violations of:

1. Providing false information on the application.
2. Operation in violation of the permit.
3. Continued operation after an order to cease operation(s) has been given.
4. After lawful order to off load.

These violations may result in the following penalties in addition to any other traffic complaints or citations:

- **1st Offense Other Than Overweight:**
  1. Permit revoked.
  2. All information must be corrected (to include level of registration) before new permit is issued.
- **2nd Offense Other Than Overweight Within 1 Year:**
  1. Permit revoked.
  2. No permit may be issued to the permittee for thirty (30) days.
- **3rd Offense Other Than Overweight Within 1 Year:**
  1. Permit revoked.
  2. No permit may be issued to the permittee for sixty (60) days.
- **4th Offense Other Than Overweight Within 1 Year:**
  1. Permit revoked.
  2. All existing permits issued to the permittee are revoked for fifteen (15) days.

Clean Copy

Special Purpose Blanket Permits

- **INTRODUCTION:**

  23 VSA §1400 and §1402 empower the Commissioner of Motor Vehicles to issue overweight or over dimension permits for the operation or movement of a vehicle over state highways and certain town highways in excess of the legal limit. The Commissioner may make rules subject to which the vehicle must be operated. The approval may be given for a limited or unlimited length of time and may be withdrawn for cause. In addition, the Commissioner of Motor Vehicles may deny permits for just cause including, but not limited to, providing false information on applications, continued violation of the rules governing overweight/over dimension operation and/or repeated violation of similar laws or regulations.

  The policy of the Department is to give consideration to the safety and convenience of the general public and the protection of the highway systems of this state. The legislature, in setting forth certain statutory limitations, intended to protect the public from hazard and unnecessary inconvenience and to preserve the highways.

- **DEFINITION:**

  A Special Purpose Blanket Permit is the written authorization granted by the Commissioner of Motor Vehicles for the movement of a nondivisible special purpose vehicle such as well drillers and concrete pump trucks with prescribed limits of size and/or weight over State/Interstate highways.

- **WHERE TO APPLY:**

  Applications are primarily accepted through the mail or in person and may be obtained from:

  Commercial Vehicle Operations
  Department of Motor Vehicles
  120 State Street
  Montpelier, VT 05603-0001

  Phone: 802-828-2064
  Fax: 802-828-5418
  DMV.CommercialVehicleOSOWPermitting@vermont.gov
  dmv.vermont.gov

- **EXPIRATION:**

  Special Purpose Blanket permits expire with the vehicles registration.

- **PERMITS ISSUED TO REGISTRANT:**

  Permits must be issued in the name of the registrant and match the registration certificate.

- **TRANSFER OF PERMITS:**

  Permits may only be transferred in conjunction with the truck registration for an administrative fee.

- **HOURS OF OPERATION:**

Clean Copy

Travel with vehicles and/or loads which are over width, or over length or over height shall be restricted to daylight hours and movement shall be made between thirty (30) minutes before sunrise to thirty (30) minutes after sunset. Vehicles which are overweight only, and are capable of traveling with the traffic flow, are not restricted to daylight travel time.

On highways where traffic is heavy during certain hours, it may be necessary to further restrict the movement to certain hours of the day or to certain days of the week.

- **HOLIDAY OPERATIONS:**

Loads over twelve feet (12'0") wide may not be operated on state highways on any of the following legal holidays as observed in the State of Vermont.

- New Year's Day: January 1st
- Memorial Day: Last Monday in May
- Independence Day: July 4th
- Labor Day: 1st Monday in September
- Thanksgiving Day: 4th Thursday in November
- Christmas Day: December 25th

The Commissioner of Motor Vehicles may further restrict the movement of over-legal size vehicles before and after certain holidays if deemed necessary.

- **INCLEMENT WEATHER:**

For loads 12' wide or greater, and/or 80' long or greater:

No travel is allowed during any ice condition, sleet, freezing rain, slush or combination thereof or any snow accumulation to the extent that it is heavy enough to stick to the highway surface; and no travel is allowed when visibility is reduced by rain, fog or any other weather condition to the extent that the load is not readily identifiable by users of the highway at a distance of a quarter (¼) mile. At all times roads must be safe and clear enough to allow traffic to pass.

When such conditions exist during a trip, permitted vehicles must exit the road at the first available safe location where vehicle and load can park without impeding traffic until the weather conditions clear. A vehicle is not permitted to travel during inclement weather if it is subject to, or was required to have, and engineering review.

- **SPEED:**

The Commissioner may prescribe maximum speeds below legal limits for hazardous loads or conditions. State highways speed is limited to forty-five (45) miles per hour for loads in excess of ninety thousand (90,000) pounds or ten feet (10') in width or thirteen feet, six inches (13' 6") in height or seventy-five feet (75') in length. Interstate highways maximum speed shall be sixty (60) miles per hour unless otherwise specified. Speed may be restricted further on specific roads or portions of roads as required to ensure safe movement of over dimension loads.

- **POSTED ROADS:**

During winter thaws, rainy periods or when frost begins to melt, the Agency of Transportation may post state highways. Permits **DO NOT** supercede road postings.

Clean Copy

- **MAXIMUM LIMITS:**

Blanket permits for statewide operation must conform to the following guidelines:

1. Maximum Width: Ten feet, six inches (10' 6") when length is greater than seventy-five feet (75') up to one hundred feet (100').

2. Maximum Width: Twelve feet, six inches (12' 6") when length does not exceed seventy-five feet (75').

3. Maximum Height: Fourteen feet (14').

4. Maximum Weight for Nondivisible Loads Only: One hundred eight thousand (108,000) pounds, depending on the number of axles and axle spacing. Vehicle must be registered to at least eighty thousand (80,000) pounds.

5. Maximum length for vehicles without a trailer or semi-trailer (single vehicle) may not exceed forty-six feet (46').

Operation at one hundred feet (100') or more in length, the permit applicant shall file with the Commissioner of Motor Vehicles, a special certificate of insurance showing minimum coverage of $250,000 for death or injury to one person, $500,000 for death or injury to two or more persons and $250,000 for property damage, all arising out of any one accident.

Blanket permits generally will not be issued for over width, or over length truck – trailer combinations for statewide operation where the vehicle excluding the load is in excess of the legal limit.

- **PERMISSION FROM CITIES/TOWNS:**

  - **OVERWEIGHT:**

    For operation of a vehicle in excess of the statutory weight limits over highways and bridges under the jurisdiction of a municipality, except Class 1 town highways, application will be made to the appropriate legislative body or its representative. A list of any special weight limits which differ from statutory limits is available from the Department of Motor Vehicles along with the name of the person responsible for issuing permits in each municipality.

  - **OVERDIMENSION:**

    For operation, on highways under the jurisdiction of a municipality, of a vehicle and load in excess of the statutory dimensions, but within the dimensions allowed under a "Blanket Permit", permits may be issued by the Department of Motor Vehicles, Commercial Vehicle Operations Unit. For operation of a vehicle and load in excess of the dimensions allowed under a blanket permit, permits are issued by the municipality. Application is made to the appropriate legislative body or their representative.

Clean Copy

- **MAXIMUM WEIGHT:**

  No vehicle or combination of vehicles shall be operated upon the highways of this state when the gross weight on the road surface through any wheel thereof exceeds six hundred (600) pounds per inch of tire width. (Manufacturer's designation shall be used for computing tire width.) Any permit issued shall not be valid upon the state highways, state aid or town roads or bridges that are posted for a lower road limit than the gross weight of the vehicle and load.

- **MAXIMUM HEIGHT:**

  The clearance of facilities and general safety of the traveling public are the governing factors in issuing over height permits. The height of structures shall be checked by the permit applicant to insure that adequate clearance is available for the movement. The height of traffic lights at fourteen feet (14') is a factor in determining the height allowed.

  - **Note:** Older traffic signals may be lower due to stretch and sag.

- **USE OF TRAVEL LANES:**

  When two or more lanes are available in one direction, vehicles shall travel in the right lane except in an emergency or to comply with any other restrictions established by the state.

- **CONVOY OPERATIONS:**

  There shall be a minimum spacing of one thousand feet (1,000') between permitted vehicles when two (2) or more permitted vehicles are traveling together.

- **SLOW MOVING VEHICLES:**

  All slow moving vehicles shall keep as close to the right hand side of the highway as is reasonably practicable. A person operating a motor vehicle impeding other traffic on a highway shall pull off the highway at the first safe haven to allow the traffic to pass before proceeding.

- **PARKED OVERSIZE LOADS:**

  Any oversize load, when parked at other than its place of origin or destination, shall conspicuously display the name and telephone number of a party that, at all hours can see to its immediate removal or security if needed. These markings shall be easily legible.

- **DEPARTMENT JURISDICTION:**

  The permit will be effective only insofar as the Department has jurisdiction and authority and it does not release the applicant from complying with other existing laws, local ordinances or conditions which may govern the movement.

Clean Copy

- **ADMINISTRATIVE PENALTIES:**

BLANKET PERMITS:

Administrative Penalties for Violations of:

1. Providing false information on application.
2. Operation in violation of permit.
3. Continued operation after an order to cease operation(s) has been given.

These violations may result in the following penalties in addition to any other traffic complaints or citations:

- **1st Offense:**
  1. Officer issues Vermont Civil Violation Complaint.
  2. Vehicle may continue after being brought into compliance or new permit issued.
- **2nd Offense Within 1 Year:**
  1. Officer issues Vermont Civil Violation Complaint; permit is voided.
  2. Vehicle may continue after being brought into compliance and a new permit is issued.
- **3rd Offense Within 1 Year:**
  1. Officer issues Vermont Civil Violation Complaint; permit is voided.
  2. Vehicle and load brought into compliance.
  3. 24-hour permit issued.
  4. No permit issued to cited vehicle for fifteen (15) days.
- **4th Offense Within 1 Year:**
  1. Officer issues Vermont Civil Violation Complaint; permit is voided.
  2. Vehicle and load brought into compliance.
  3. Cited vehicles permit canceled.
  4. 24-hour permit issued.
  5. No Blanket or Single Trip Permit issued to cited vehicle for thirty (30) days.

Clean Copy

Special Purpose Motor Vehicle in Excess of the Statutory Limits ~ Self-Issue Crane Permits

- **INTRODUCTION:**

The Commissioner of Motor Vehicles hereby adopts a self-issue permit process governing the operation of cranes across structures including bridges and culverts. 23 VSA §1400 and §1402 empower the Commissioner of Motor Vehicles to issue overweight or over dimension permits for the operation or movement of a vehicle over state highways and certain town highways in excess of the legal limit. The Commissioner may make rules subject to which the vehicle must be operated. The approval may be given for a limited or unlimited length of time and may be withdrawn for cause. In addition, the Commissioner of Motor Vehicles may deny permits for just cause including, but not limited to, providing false information on applications, continued violation of the rules governing overweight/over dimension operation and/or repeated violation of similar laws or regulations.

The policy of the Department is to give consideration to the safety and convenience of the general public and the protection of the highway systems of this state. The legislature, in setting forth certain statutory limitations, intended to protect the public from hazard and unnecessary inconvenience and to preserve the highways.

- **PERMIT DIMENSIONS:**

Carriers utilizing the self-issue permit process must fall into one of the established crane categories. Crane categories have been established for two (2), three (3), four (4), and five (5) axle cranes. These categories include structures that require a five (5) mile per hour speed limit when being crossed and also listings of structures that cannot be crossed to include bridges and culverts . The crane categories were developed based on actual measured weights and axle spacings provided by the Department of Motor Vehicles. These lists are dynamic and minor changes are anticipated as bridges are either replaced or re-rated due to a change in condition. It is anticipated, other than an emergency situation (i.e. structure posting/restriction/closing), any updates will be done on an annual basis.

A complete listing of all crane categories including routing and structure restrictions can be obtained by contacting the Commercial Vehicle Permit Unit or accessing the Department's Web Site at: dmv.vermont.gov, select Commercial Trucking – Self Propelled Crane Information. There is also a link that will take you to the Vermont Agency of Transportation mapping system which is a web based, GIS application that allows users to map and display information with restrictions for two (2), three (3), four (4), and five (5) axle crane movements. This will be a beneficial tool when selecting routes for self-propelled cranes over the highways of Vermont. The Department, in conjunction with the Agency of Transportation, has developed a list of approved routes for which permits may be issued. Depending on the destination, there is no guarantee a crane will be eligible for a permit. If the requested route of travel is not an approved route, the Agency of Transportation engineers would have to evaluate the route to assure the road and/or bridges could accommodate the weight of the crane. This evaluation could result in the issuance of a single trip permit.

Clean Copy

An Administrative decision has been declared that cranes will be considered a nondivisible load, meaning it cannot be broken down and will be allowed to travel with counter weights and boom. Cranes operators are required to get a Single Trip Permit, which will only be issued for approved routes. If traveling on a route that has not been surveyed for a crane, the engineers must review the vehicle dimensions and weight along with the requested routing. A diagram of the crane would have to be submitted along with the axle weights, axle spacing and tire size.

- **DEFINITION:**

The Special Purpose Motor Vehicle in Excess of the Statutory Limits Permit was created to expedite the issuance of crane permits. Vehicles falling into the designated envelopes/categories must adhere to the restrictions outlined for that specific category. The Carrier shall act as an agent of the Department of Motor Vehicles for the purpose of self-issuing a crane Single Trip Permit. Single Trip is defined as a trip in one direction between two designated points.

- **WHERE TO APPLY:**

To establish an escrow account, obtain application forms, permit numbers and make an application, contact:

Commercial Vehicle Operations	Phone: 802-828-2064
Department of Motor Vehicles	Fax: 802-828-5418
120 State Street	DMV.CommercialVehicleOSOWPermitting@vermont.gov
Montpelier, VT 05603-0001	dmv.vermont.gov

- **ACCEPTABLE PAYMENT:**

Checks or money orders in US Funds, must be made payable to the Vermont Department of Motor Vehicles.

- **EXPIRATION:**

Single Trip Permits may be issued to cover a single trip within seven (7) business days of issuance. When the trip will exceed the seven (7) day limit, a new permit will be required.

- **MEMORANDUM OF UNDERSTANDING (MOU):**

Prior to giving an individual or company the authority to Self-Issue Permits, they must enter into an MOU with the Department of Motor Vehicles. The MOU outlines the requirements of the carrier and their responsibilities once they enter into the agreement. The MOU will be accompanied with specific procedures, permit applications and a listing of restrictions for structures in their crane category that must be adhered to when issuing the Self-Issue Permits.

- **AUTHORIZED AGENTS:**

Carrier must provide the Department of Motor Vehicles with a signature card of authorized agents allowed to issue permits. This card must contain the printed name, signature and a 24-hour contact

Clean Copy

phone number. Additions or deletions to this card must be made immediately. Unauthorized signatures will void the permit.

- **PERMIT APPLICATIONS:**

Requests for permit applications must be made to the Commercial Vehicles Permit Unit. Permit applications are two sided and will not be considered valid unless both sides are carried in the vehicle. Application may be photocopied, however they must be neat and legible when completed and faxed to the Department of Motor Vehicles and the Carrier.

- **PERMIT NUMBERS:**

To satisfy the requirements of the Department of Motor Vehicles rules and applicable statutes, the Carrier must request a series of permit numbers from the Department of Motor Vehicles Commercial Vehicles Permit Unit that is sufficient as to insure an ample and ongoing supply for the carrier. The regular statutory fee for each number issued will be deducted from the Carrier's escrow account. Permit number requests will require a 24-hour advance notice. Self-issuance of these permits will not affect the Carrier's current and ongoing ability to secure individual over length permits from the Department of Motor Vehicles during normal business hours.

- **PERMIT VALIDATION:**

The Authorized Agent will be responsible for ensuring that the permit application, form number TA-VX-01, is **completed in full**, including the issuance of authorized routes only. When the authorized agent has completed the permit application in full, it will be immediately faxed to the Vermont Department of Motor Vehicles. The authorized agent must then print the **Fax Transmission Verification Report** from their fax machine that shall include the date and time of the fax and the fax results, i.e., OK or BUSY. This verification report **must** be kept with the permit application, faxed to the driver before entering or moving within the State of Vermont, and will serve as validation of the permit when accompanied with the 2-part permit form TA-VX-01.

- **CANCELLING PERMITS:**

When the self-issued permit is received in the Department of Motor Vehicles Commercial Vehicle Permit Unit, it will be entered into the Carrier's escrow account along with the information that is contained in the permit. Once the permit is issued and faxed to the Department of Motor Vehicles it is considered valid and cannot be cancelled. The Department of Motor Vehicles is not responsible for the mishandling of the permit by the carrier, nor incorrect information entered onto the permit by the carrier.

- **PERMITS ISSUED TO REGISTRANT:**

Permits will be issued only to the person or firm who will actually be doing the transporting of vehicle and load.

- **ONLY ONE VEHICLE ON A PERMIT:**

Only one vehicle or combination vehicle will be allowed on each permit.

Clean Copy

- **CARRYING PERMITS:**

  The permit, or a legible permit facsimile, must be carried in the vehicle. The permit shall be available for inspection by any enforcement officer or representative of the Department of Motor Vehicles or Agency of Transportation empowered to issue such permit during movement authorized by the permit.

- **PERMISSION FROM CITIES/TOWNS:**

  - **OVERWEIGHT:**

    For operation of a vehicle in excess of the statutory weight limits over highways and bridges under the jurisdiction of a municipality, except Class 1 town highways, application will be made to the appropriate legislative body or its representative. A list of any special weight limits which differ from statutory limits is available from the Department of Motor Vehicles along with the name of the person responsible for issuing permits in each municipality.

  - **OVERDIMENSION:**

    For operation of over dimensional vehicles, on highways under the jurisdiction of a municipality, a vehicle and load in excess of the statutory dimensions, but within the dimensions allowed under a "Blanket Permit", permits may be issued. For operation of a vehicle and load in excess of the dimensions allowed under a Blanket Permit, permits are issued by the municipality. Application is made to the appropriate legislative body or their representative.

    Carriers should understand that town permits might be required for the use of town roads. A check with the appropriate town for any local requirements is advisable before utilizing town highways.

- **SIGNS/SIGN REQUIREMENTS:**

  Oversize load sign required:

  - For over eight feet, six inches (8' 6") width.
  - For over thirteen feet, six inches (13' 6") height.
  - For over for over seventy five feet (75') in length.
  - For over forty-six feet (46') for single vehicles.

  This sign shall be at least seven feet (7') long by eighteen inches (18") high with yellow background and black lettering. Letters shall be at least ten inches (10") high with a one and one-quarter inch (1¼") brush stroke. The sign shall be made of durable material that will not be affected by inclement weather and kept in legible condition. It shall read "OVERSIZE LOAD". A similar sign that is allowed in other states will be accepted. **The sign must be securely attached to the front most portion and rear most portion of the load or vehicle. The sign must be covered or removed when not making an oversize move.**

Clean Copy

If a load consists of an over length object such as a pole or beam, the sign need not be seven feet (7') long but must be of a sufficient size to clearly display the same size lettering as described above.

- **FLAGS/LIGHTS:**

Flags are required on all oversize loads. The flag must be bright or fluorescent red or orange and have a minimum size of eighteen inches by eighteen inches (18" x 18"). They shall be displayed on all four corners (or as close as practicable) of all loads or vehicles that exceed the legal dimensions. Flags shall be in such condition as to be easily distinguished from a reasonable distance. All warning flags shall be secured by at least one corner or mounted on a staff.

1. Over Width Loads: At least four (4) flags mounted at the corners of the vehicle if the vehicle is oversize and at the corners of the load if the load is oversize. In cases of irregular shaped loads such additional flags as may be necessary to mark the widest extremities of the load.

2. Over length loads or loads with rear or front end overhang in excess of four feet (4') shall display one flag at the end of the overhang if less than two feet (2') wide and two (2) flags if the overhang is two feet (2') wide or more.

3. Commercial motor vehicles, as defined in 49 CFR 390.5, must have lights installed and operable on the projecting loads as required by 49 CFR 393.11 Footnotes 9 & 10.

- **USE OF TRAVEL LANES:**

When two or more lanes are available in one direction, vehicles shall travel in the right lane except in an emergency or to comply with any other restrictions established by the state.

- **CONVOY OPERATIONS:**

There shall be a minimum spacing of one thousand feet (1,000') between permitted vehicles when two (2) or more permitted vehicles are traveling together.

- **SLOW MOVING VEHICLES:**

All slow moving vehicles shall at all times keep as close to the right hand side of the highway as is reasonably practicable. A person operating a motor vehicle impeding other traffic on a highway shall pull off the highway at the first safe haven to allow the traffic to pass before proceeding.

- **PARKED OVERSIZE LOADS:**

Any oversize load, when parked at other than its place of origin or destination, shall conspicuously display the name and telephone number of a party that, at all hours can see to its immediate removal or security if needed. These markings shall be easily legible.

- **DEPARTMENT JURISDICTION:**

The permit will be effective only insofar as the Department has jurisdiction and authority and it does not release the applicant from complying with other existing laws, local ordinances or conditions which may govern the movement.

Clean Copy

- **RESPONSIBILITY:**

The applicant shall assume all responsibility for injury to persons or damage to public or private property caused directly or indirectly by the transportation of vehicle or loads under the permit. Furthermore, the applicant agrees to hold the State of Vermont, Agency of Transportation, and the Department of Motor Vehicles harmless from all suits, claims, damages or proceedings of any kind as a direct or indirect result of the transportation of the vehicle and/or load.

- **VIOLATION OF PERMIT CONDITIONS:**

A Self-Issue Crane Single Trip Permit may be voided and confiscated by any law enforcement officer and is automatically invalidated for the trip by the violation of any condition specified in the terms of the permit, these rules and regulations or by false information given on the application.

- **ADMINISTRATIVE PENALTIES:**

MULTIPLE CONVICTIONS OF VIOLATIONS

SINGLE TRIP PERMITS:

Administrative Penalties for Violations of:

1. Providing false information on the application.
2. Operation in violation of the permit.
3. Continued operation after an order to cease operation(s) has been given.

These violations may result in the following penalties in addition to any other traffic complaints or citations:

- **1st Offense:**
  1. Officer issues Vermont Civil Violation Complaint.
  2. Vehicle may continue after being brought into compliance or new permit issued.
- **2nd Offense Within 1 Year:**
  1. Officer issues Vermont Civil Violation Complaint; permit is voided.
  2. Vehicle may continue after being brought into compliance and new permit is issued.
- **3rd Offense Within 1 Year:**
  1. Officer issues Vermont Civil Violation Complaint; permit is voided.
  2. Vehicle and load brought into compliance.
  3. 24-hour permit issued.

Clean Copy

4. No Single Trip Permit issued to cited vehicle for fifteen (15) days.

- **4th Offense Within 1 Year:**

1. Officer issues Vermont Civil Violation Complaint; permit is voided.
2. Vehicle and load brought into compliance.
3. 24-hour permit issued.
4. No Single Trip Permit issued to cited vehicle for thirty (30) days.

Clean Copy

Superloads/Engineering Inspections

- **INTRODUCTION:**

23 VSA §1400 and §1402 empower the Commissioner of Motor Vehicles to issue overweight or over dimension permits for the operation or movement of a vehicle over state highways and certain town highways in excess of the legal limit. The Commissioner may make rules subject to which the vehicle must be operated. The approval may be given for a limited or unlimited length of time and may be withdrawn for cause. In addition, the Commissioner of Motor Vehicles may deny permits for just cause including, but not limited to, providing false information on applications, continued violation of the rules governing overweight/over dimension operation and/or repeated violation of similar laws or regulations.

The policy of the Department is to give consideration to the safety and convenience of the general public and the protection of the highway systems of this state. The legislature, in setting forth certain statutory limitations, intended to protect the public from hazard and unnecessary inconvenience and to preserve the highways.

- **ENGINEERING INSPECTION REQUIREMENTS FOR STATE/INTERSTATE HIGHWAYS:**

An Engineering Inspection is required when the vehicle and/or load meets or exceeds any one of the following:

1. Width: Fifteen feet (15') or more except on town highways.

2. Length: More than one hundred feet (100') except on town highways.

3. Height: More than fourteen feet (14') except on town highways.

4. Weight: One hundred fifty thousand (150,000) pounds or more except on town highways.

- **DEFINITION:**

An Engineering Inspection is an in depth review of the requested route and its structures when the weight and/or size of the vehicle and/or load is considered sufficiently excessive. A fee will be added to the cost of the permit in accordance with 23 VSA §1402. An Engineering Inspection may take up to ten (10) working days to process from the date the completed request is received. The Engineering Inspection will be valid for six (6) months for any part of the approved route for loads of the same or lesser dimensions and weights/weight distribution, subject to a minimal inspection at the time of each permit application.

Clean Copy

- **WHERE TO APPLY:**

  Applications are primarily accepted through the mail or in person and may be obtained from:

  Commercial Vehicle Operations
  Department of Motor Vehicles
  120 State Street
  Montpelier, VT 05603-0001

  Phone: 802-828-2064
  Fax: 802-828-5418
  DMV.CommercialVehicleOSOWPermitting@vermont.gov
  dmv.vermont.gov

- **EXPIRATION:**

  Permits issued as a result of an Engineering Inspection will be valid for seven (7) business days from the date of issue. The Engineering Inspection will be valid for six (6) months for any part of the approved route for loads of the same or lesser dimensions and weights/weight distribution, subject to a minimal inspection at the time of each permit application.

- **PERMITS ISSUED TO REGISTRANT:**

  Permits must be issued in the name of the registrant and match the registration certificate.

- **INFORMATION TO BE PROVIDED BY APPLICANT SHALL INCLUDE, BUT NOT BE LIMITED TO:**

  1. Applicant name and address.
  2. Description of the towing vehicle:
     a. Make
     b. Registration number and state.
     c. Registered weight.
     d. Number of axles.
  3. Description of trailer:
     a. Make
     b. Registration number and state.
     c. Number of axles.
     d. Serial number (mobile home only) – last four digits.
  4. Description of load.
  5. Gross weight.
  6. Overall dimensions – width, height, length.

Clean Copy

7. Empty width/length of trailer or truck/tractor/trailer combination if over dimensional. (Vermont statute considers any truck/tractor/trailer combination that exceeds seventy-five feet (75') in length or trailer that exceeds fifty-three feet (53') in length or eight feet, six inches (8' 6") in width or thirteen feet, six inches (13'6") in height to be over dimension).

8. Origin and destination:

   a. Street/road, town/city, state/province) of the load, **not the point of entry into Vermont**.

   b. The exact mileage from the load's origin to state or interstate highway and from interstate or state highway to exact destination of load.

9. Routes requested:

   a. Exact route numbers, town road numbers/names to include route direction (N, S, E, W).

   b. Map of routing required if city or town roads are used. Map must show distances and specific directions from point of origin to the state highway, from the state highway to the point of destination, or closest reference point.

10. Diagram showing tire size, axle spacing, axle weights and dimensions of truck/tractor/trailer and load.

11. Number of loads to be moved.

12. Letters from all utilities involved if applicable (to be submitted with application).

13. Written approval from select board or other authorized persons when city or town streets or roads are to be used (to be submitted with the application).

14. Special certificate of insurance showing a minimum of $250,000 for death or injury of one person, $500,000 for death or injury to two (2) or more persons and $250,000 property damage, all arising out of any one incident, must be submitted with the application to the Department of Motor Vehicles. The insurance certificate must show: Department of Motor Vehicles, 120 State St., Montpelier, VT, 05603 **as the certificate holder**. The Secretary of Transportation or his/her authorized representative at their discretion, may require additional insurance certificates or bonds, based on the oversize load. A faxed copy of the Certificate of insurance is acceptable.

- **HOURS OF OPERATION:**

Travel with vehicles and/or loads which are over width or over length or over height shall be restricted to daylight hours and movement shall be made between thirty (30) minutes before sunrise to thirty (30) minutes after sunset. Vehicles, which are overweight only and are capable of traveling with the traffic flow, are not restricted to daylight travel time.

On highways where traffic is heavy during certain hours, it may be necessary to further restrict the movement to certain hours of the day or to certain days of the week.

Clean Copy

- **SATURDAY, SUNDAY AND HOLIDAY OPERATIONS:**

On state highways unless otherwise stated, permits will **not** be issued for movement of loads in excess of one hundred eight thousand (108,000) pounds, or over twelve feet (12'0") wide or over one hundred feet (100') long on any Saturday, Sunday, or on the following legal holidays as observed in the State of Vermont:

- New Year's Day: January 1st
- Memorial Day: Last Monday in May
- Independence Day: July 4th
- Labor Day: 1st Monday in September
- Thanksgiving Day: 4th Thursday in November
- Christmas Day: December 25th

The Commissioner of Motor Vehicles may further restrict the movement of over-legal size vehicles before and after certain holidays if deemed necessary.

- **INCLEMENT WEATHER:**

For loads 12' wide or greater, and/or 80' long or greater:

No travel is allowed during any ice condition, sleet, freezing rain, slush or combination thereof or any snow accumulation to the extent that it is heavy enough to stick to the highway surface; and no travel is allowed when visibility is reduced by rain, fog or any other weather condition to the extent that the load is not readily identifiable by users of the highway at a distance of a quarter (¼) mile. At all times roads must be safe and clear enough to allow traffic to pass.

When such conditions exist during a trip, permitted vehicles must exit the road at the first available safe location where vehicle and load can park without impeding traffic until the weather conditions clear. A vehicle is not permitted to travel during inclement weather if it is subject to, or was required to have, and engineering review.

- **SPEED:**

The Commissioner may prescribe maximum speeds below legal limits for hazardous loads or conditions. State highways speed is limited to forty-five (45) miles per hour for loads in excess of ninety thousand (90,000) pounds or ten feet (10') in width or thirteen feet, six inches (13' 6") in height or seventy-five feet (75') in length. Interstate highways maximum speed shall be sixty (60) miles per hour unless otherwise specified. Speed may be restricted further on specific roads or portions of roads as required to ensure safe movement of over dimension loads.

- **POSTED ROADS:**

During winter thaws, rainy periods or when frost begins to melt, the Agency of Transportation may post state highways. Permits **DO NOT** supersede road postings.

- **PERMISSION FROM CITIES/TOWNS:**

  - **OVERWEIGHT:**

Clean Copy

For operation of a vehicle in excess of the statutory weight limits over highways and bridges under the jurisdiction of a municipality, except Class 1 town highways, application will be made to the appropriate legislative body or its representative. A list of any special weight limits which differ from statutory limits is available from the Department of Motor Vehicles along with the name of the person responsible for issuing permits in each municipality.

- **OVERDIMENSION:**

  For operation, on highways under the jurisdiction of a municipality, of a vehicle and load in excess of the statutory dimensions, but within the dimensions allowed under a "Blanket Permit", permits may be issued by the Department of Motor Vehicles, Commercial Vehicle Operations Unit. For operation of a vehicle and load in excess of the dimensions allowed under a blanket permit, permits are issued by the municipality. Application is made to the appropriate legislative body or their representative.

- **USE OF TRAVEL LANES:**

  When two or more lanes are available in one direction, vehicles shall travel in the right lane except in an emergency or to comply with any other restrictions established by the state.

- **CONVOY OPERATIONS:**

  There shall be a minimum spacing of one thousand feet (1,000') between permitted vehicles when two (2) or more permitted vehicles are traveling together.

- **SLOW MOVING VEHICLES:**

  All slow moving vehicles shall at all times keep as close to the right hand side of the highway as is reasonably practicable. A person operating a motor vehicle impeding other traffic on a highway shall pull off the highway at the first safe haven to allow the traffic to pass before proceeding.

- **PARKED OVERSIZE LOADS:**

  Any oversize load, when parked at other than its place of origin or destination, shall conspicuously display the name and telephone number of a party that, at all hours can see to its immediate removal or security if needed. These markings shall be easily legible at all times.

- **DEPARTMENT JURISDICTION:**

  The permit will be effective only insofar as the Department has jurisdiction and authority and it does not release the applicant from complying with other existing laws, local ordinances or conditions which may govern the movement.

- **FLAGS/LIGHTS:**

  Flags are required on all oversize loads. The flag must be bright or fluorescent red or orange and have a minimum size of eighteen inches by eighteen inches (18" x 18"). They shall be displayed on all four corners (or as close as practicable) of all loads or vehicles that exceed the legal dimensions.

Clean Copy

Flags shall be in such condition as to be easily distinguished from a reasonable distance. All warning flags shall be secured by at least one corner or mounted on a staff.

1. Over Width Loads: At least four (4) flags mounted at the corners of the vehicle if the vehicle is oversize and at the corners of the load if the load is oversize. In cases of irregular shaped loads such additional flags as may be necessary to mark the widest extremities of the load.

2. Over length loads or loads with rear or front end overhang in excess of four feet (4') shall display one flag at the end of the overhang if less than two feet (2') wide and two (2) flags if the overhang is two feet (2') wide or more.

3. Commercial motor vehicles operating in interstate and intrastate commerce as defined in 49 CFR 390.5; Such vehicles must have lights installed and operable on the projecting loads as required by 49 CFR 393.11 Footnotes 9 & 10.

- **SIGNS/SIGN REQUIREMENTS:**

Oversize load sign required:

- For over eight feet, six inches (8' 6") width.
- For over thirteen feet, six inches (13' 6") height.
- For over seventy-five feet (75') length.

This sign shall be at least seven feet (7') long by eighteen inches (18") high with yellow background and black lettering. Letters shall be at least ten inches (10") high with a one and one-quarter inch (1¼") brush stroke. The sign shall be made of durable material that will not be affected by inclement weather. It shall read "OVERSIZE LOAD". A similar sign that is allowed in other states will be accepted. **The sign must be securely attached to the front most portion and rear most portion of the load or vehicle. The sign must be covered or removed when not making an oversize move.**

If a load consists of an over length object such as a pole or beam, the sign need not be seven feet (7') long but must be of a sufficient size to clearly display the same size lettering as described above.

- **ESCORT VEHICLE REQUIREMENTS:**

Escort vehicles are required when the vehicle and/or load meet or exceed the following dimensions or at the discretion of the Commissioner of Motor Vehicles or his/her authorized representative:

- Wide load of twelve feet (12') or greater.
- Long load of eighty feet (80') or greater.
- Overhang of fifteen feet (15') or greater.

An escort vehicle must be at least the size of a compact car or larger. Escort vehicles must maintain two-way radio contact with the permitted vehicle at all times. The escort vehicle must be equipped with a flashing amber light above the highest point of the vehicle or a combination of lights visible

Clean Copy

from 360 degrees. An escort vehicle preceding an oversize load shall have a sign on the front reading “OVERSIZE LOAD” and an escort vehicle following shall have a sign on the rear reading “OVERSIZE LOAD”. These signs shall have ten inch (10”) black letters one and one-quarter inch (1¼”) brush stroke on a yellow background and be at least five feet (5’) long and twelve inches (12”) high. Signs must be maintained in a legible condition.

The signs must be covered or removed when the escort vehicle is not accompanying an oversize load.

The escort vehicle must maintain proper spacing between itself and the oversize load so as to adequately warn approaching vehicles.

When one escort is required, it shall precede a load on undivided highways and follow the load on divided highways. Escort vehicle headlights shall be on low beam during all moves.

The Commissioner of Motor Vehicles or his/her authorized representative may require two or more escort vehicles.

- **POLICE ESCORT:**

At the discretion of the Commissioner of Motor Vehicles or his/her authorized representative one or more police escorts may be required.

The police escort shall be responsible to ensure that the vehicle and load are transported within the permitted restrictions and for the overall safe movement of the load, including the control of oncoming traffic to avoid incidents or accidents. The police escort shall be responsible to orally review the permit restrictions with the oversize load driver(s) and the escort vehicle driver(s) and shall be responsible to ensure that two-way inter-vehicle radio communication is maintained throughout the trip. In the event of an emergency occurring during the move the police escort shall contact the Commercial Vehicle Operations Unit 802-828-2064 or contact the nearest State Police Dispatch.

- **ADMINISTRATIVE PENALTIES:**

MULTIPLE CONVICTIONS OF VIOLATIONS

SINGLE TRIP PERMITS:

Administrative Penalties for Violations of:

1. Providing false information on the application.

2. Operation in violation of the permit.

3. Continued operation after an order to cease operation(s) has been given.

These violations may result in the following penalties in addition to any other traffic complaints or citations:

Clean Copy

- **1st Offense:**
  1. Officer issues Vermont Civil Violation Complaint.
  2. Vehicle may continue after being brought into compliance or new permit issued.
- **2nd Offense Within 1 Year:**
  1. Officer issues Vermont Civil Violation Complaint; permit is voided.
  2. Vehicle may continue after being brought into compliance and new permit is issued.
- **3rd Offense Within 1 Year:**
  1. Officer issues Vermont Civil Violation Complaint; permit is voided.
  2. Vehicle and load brought into compliance.
  3. 24-hour permit issued.
  4. No Single Trip Permit issued to cited vehicle for fifteen (15) days.
- **4th Offense Within 1 Year:**
  1. Officer issues Vermont Civil Violation Complaint; permit is voided.
  2. Vehicle and load brought into compliance.
  3. 24-hour permit issued.
  4. No Single Trip Permit issued to cited vehicle for thirty (30) days.

Clean Copy

Over Length Permit for Operation on Route 4

- **INTRODUCTION:**

23 VSA §1432 empower the Commissioner of Motor Vehicles to issue nondivisible over length permits for the operation of vehicles with or without a trailer or semi-trailer over Route 4 from the New Hampshire state line to the junction of VT Route 100 South. The Commissioner may make regulations subject to which the vehicle must be operated. The approval may be given for a limited or unlimited length of time and may be withdrawn for cause. In addition, the Commissioner of Motor Vehicles may deny permits for just cause including, but not limited to, providing false information on applications, continued violation of the rules governing overweight/over dimension operation and/or repeated violation of similar offenses.

The policy of the Department is to give consideration to the safety and convenience of the general public and the protection of the highway systems of this state. The legislature, in setting forth certain statutory limitations, intended to protect the public from hazard and unnecessary inconvenience and to preserve the highways.

- **PERMIT DIMENSIONS:**

Vehicles with a trailer or semi-trailer longer than sixty-eight feet (68') but not longer than seventy-five feet (75') may be operated with a single or multi trip over length permit provided the distance from the kingpin of the semitrailer to the center of the rearmost axle group is not greater than forty-one feet (41'). An "axle group" is defined as two (2) or more axles where the centers of all the axles are spaced at an equal distance. If the overall length of a vehicle with a trailer or semi-trailer is longer than seventy-five feet (75'), a permit may be issued pursuant to 23 VSA §1402. Any trailer that exceeds fifty-three feet (53') is not legal for operation in the State of Vermont and no permit shall be issued.

In no instance will a permit be issued that exceeds any legal dimension for Vermont, except the length and only up to and including seventy-five feet (75'), unless otherwise stated. Gross weight cannot exceed eighty thousand (80,000) pounds, width cannot exceed eight feet, six inches (8' 6") and height cannot exceed thirteen feet, six inches (13' 6"). If any of these dimensions are exceeded, a permit must be obtained through the Permit Unit at DMV.

- **WHERE TO APPLY:**

Applications are primarily accepted through the mail or in person and may be obtained from:

Commercial Vehicle Operations
Department of Motor Vehicles
120 State Street
Montpelier, VT 05603-0001

Phone: 802-828-2064
Fax: 802-828-5418
DMV.CommercialVehicleOSOWPermitting@vermont.gov
dmv.vermont.gov

Clean Copy

- **PERMIT APPLICATIONS:**

  Requests for permit applications must be made to Commercial Vehicles. Application may be photocopied, however they must be neat and legible when completed and faxed to DMV. One validated permit application can be used for an entire fleet of vehicles.

- **EXPIRATION:**

  The over length permit may be issued for single or multi-trips. All permits will expire one year from the date of issue.

- **PERMITS ISSUED TO MOVER:**

  Permits will be issued only to the person or firm who will actually be doing the transporting of vehicle and load.

- **DEPARTMENT JURISDICTION:**

  The permit will be effective only insofar as the Department has jurisdiction and authority and it does not release the applicant from complying with other existing laws, local ordinances or conditions which may govern the movement.

- **RESPONSIBILITY:**

  The applicant shall assume all responsibility for injury to persons or damage to public or private property caused directly or indirectly by the transportation of vehicle or loads under the permit. Furthermore, the applicant agrees to hold the State of Vermont, Agency of Transportation, and the Department of Motor Vehicles harmless from all suits, claims, damages or proceedings of any kind as a direct or indirect result of the transportation of the vehicle and/or load.

- **CARRYING PERMITS:**

  The permit must be carried in the vehicle. The permit shall be available for inspection by any enforcement officer or representative of the Dept/Agency of Transportation empowered to issue such permit during movement authorized by the permit.

- **USE OF TRAVEL LANES:**

  When two or more lanes are available in one direction, vehicles shall travel in the right lane except in an emergency or to comply with any other restrictions established by the state.

- **CONVOY OPERATIONS:**

  There shall be a minimum spacing of one thousand feet (1,000') between permitted vehicles when two or more permitted vehicles are traveling together.

- **ADMINISTRATIVE PENALTIES:**

MULTIPLE CONVICTIONS OF VIOLATIONS

Clean Copy

SINGLE TRIP PERMITS:

Administrative Penalties for Violations of:

1. Providing false information on the application.
2. Operation in violation of the permit.
3. Continued operation after an order to cease operation(s) has been given.

These violations may result in the following penalties in addition to any other traffic complaints or citations:

- **1st Offense:**
  1. Officer issues Vermont Civil Violation Complaint.
  2. Vehicle may continue after being brought into compliance or new permit issued.
- **2nd Offense Within 1 Year:**
  1. Officer issues Vermont Civil Violation Complaint; permit is voided.
  2. Vehicle may continue after being brought into compliance and new permit is issued.
- **3rd Offense Within 1 Year:**
  1. Officer issues Vermont Civil Violation Complaint; permit is voided.
  2. Vehicle and load brought into compliance.
  3. 24-hour permit issued.
  4. No Single Trip Permit issued to cited vehicle for fifteen (15) days.
- **4th Offense Within 1 Year:**
  1. Officer issues Vermont Civil Violation Complaint; permit is voided.
  2. Vehicle and load brought into compliance.
  3. 24-hour permit issued.
  4. No Single Trip Permit issued to cited vehicle for thirty (30) days.

Clean Copy